OTAR
COMPONENTI INDUSTRIALI

UNASIS

PRECISION BEARINGS

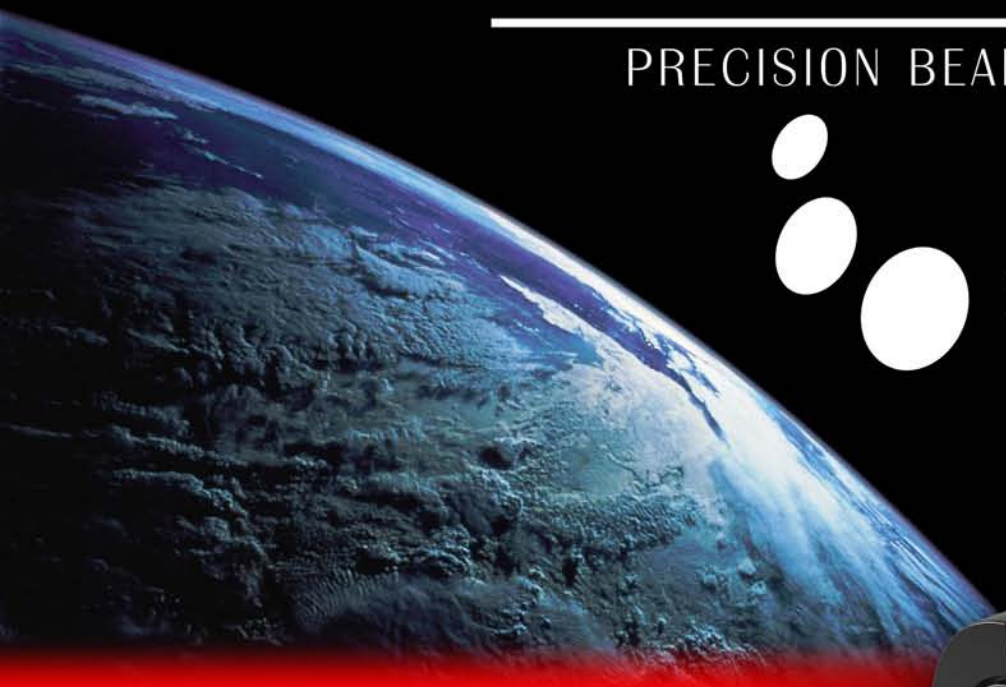

Metric Cam Follower

Product Range

UNASIS

PRECISION BEARINGS

OTAR

COMPONENTI INDUSTRIALI

Table of Contents

Introduction **4**

Load Ratings **4**

Life Calculations **5**

Design Considerations **6**

Type of Load 6

Bearing Spacing 6

Temperature 6

Bearing Fits 7

Lubrication 7

Handling 7

Special Features **8**

Hex Port Lubrication

XtrSlide Seal

Black Oxide Coating

Eccentric Collar

Hex Head Drive

Part Numbering System

Cam Followers **16**

Standard Full Compliment Cam Followers

Standard Caged Cam Follower

Full Compliment Cam Followers Eccentric Collar

Caged Cam Followers with Eccentric Collar

Stainless Steel Full Compliment Cam Followers

Stainless Steel Caged Cam Followers

Heavy Duty Cylindrical Roller Cam Followers

Yoke Rollers **30**

Standard Full Compliment Cam Followers

Standard Caged Cam Follower

Stainless Steel Full Compliment Yoke Rollers

Stainless Steel Caged Yoke Rollers

Heavy Duty Cylindrical Roller Yoke Rollers

Introduction

UNASIS precision bearing cam followers and yoke rollers offer a great alternative to the mainstream brands, coupled with greater flexibility in terms of range, specification and size which allows you to design with the freedom of knowing there is a bearing size to suit.

All UNASIS cam followers and yoke roller have to pass strict quality control checks before they reach your door. UNASIS also hold ISO:9001 quality management system accreditation so you can be confident that irrespective of quantity ordered you will always have a superb bearing to go the distance.

Over the years UNASIS has successfully designed, produced and provided completely custom cam-followers for a number of applications including indexing boxes, cam locking systems and manipulators.

Both Standard and Non-standard sizes are available. We have the capability to reverse engineer an existing bearing in order to construct a new and improved variation for your application.

We have accumulated a vast engineering knowledge over a number of years in the bearing industry. This enables our application engineers to be knowledgeable and prepared to assist you in all your bearing needs.

The Company was founded on the basis of providing alternative, special and custom solutions to bearing problems. UNASIS welcomes your enquiries for all your application requirements of a standard or special nature.

The following catalogue should provide detailed data about the UNASIS range of metric cam followers and yoke rollers. Though UNASIS does reserve the right to update, revise or amend any of the information contain within this catalogue, at any time, without notice. This includes any product data and/or specifications and does not accept liability for such changes or typographical errors within this catalogue.

Load Ratings

Dynamic Bearing Load Rating

The basic dynamic load rating given to a bearing is defined as the constant radial load under which 90% of a sample of seemingly identical bearings with stationary outer rings can theoretically endure for a given life of 1 million revolutions (33 1/3 rpm for 500 hours).

The basic dynamic load rating is a reference value only it is not advisable to subject a bearing to beyond 50% of its given dynamic rating.

If in doubt please contact UNASIS.

Static Bearing Load Rating

A bearing static load rating is the rating given by which a uniformly distributed static radial load produces a maximum contact stress of 580000 PSI.

It is at this stress level plastic deformation begins to become a significant consideration in the expected capability of the bearings functionality after the subjected load.

Higher static load is permissible when applications where subsequent bearing rotation is very slow and requirements for smoothness and friction are not critical.

OTAR S.P.A. LUNGOBISAGNO ISTRIA 29 M.R. - 16141 GENOVA - ITALY - TEL. +39 010 8356685 R.A. - FAX +39 010 8356695 - E-MAIL: OTAR@OTAR.IT

Life Calculations

Bearing life is defined as the length of time that the bearing functions normally within a given application. Providing sufficient care has been taken in the handling, mounting, lubrication and sealing of the bearing, a bearing will operate normally until fatigue wear occurs on the races or rolling elements.

Fatigue wear occurs due to repeat contact stress between the rolling element and race way surface and is inevitable after sustained usage.

Bearing life is typically given in number of revolutions or operating hours and calculated assuming constant speed and load. It is common for a bearing not to reach the full expected life due to incorrect initial fitting or lack of on going maintenance. In order to achieve the greatest potential life ensure all bearings are recommended to be handled with latex gloves, and in as clean an environment as possible. Bearings should remain sufficiently lubricated and maintained with care and attention being paid to installation.

All calculations are estimates as they do not truly reflect compounding factors such as temperature or environment which may dramatically effect the true life of a bearing.

L_{10} Life Calculations

The approximate calculated bearing life, commonly referred to as the L_{10} life, can be calculated for any bearing within a given application using the dynamic load rating of the bearing and applied radial load. Laboratory and field tests have both shown that in rolling element bearing the L_{10} life is normally inversely proportional to $^{10/3}$ power of load.

The below formula (C1.) can be used to estimate bearing life.

$$L_{10} = \left(\frac{DLR}{P}\right)^{10/3} \quad (C1.)$$

L_{10} is given in millions of revolutions, where the constant applied radial load is *P* and dynamic radial load is *DLR* (the load which gives a theoretical value of a life of one million revolutions, please see *Dynamic Bearing Load Rating, Page 4*).

The approximate L_{10} life can be calculated in hours by applying appropriate speed factors. Please use calculation (*C2.*).

$$L_{10} = \frac{16{,}666}{S}\left(\frac{DLR}{P}\right)^{10/3} \quad (C2.)$$

Where,

L_{10} = Life (hours)

DLR = Dynamic load rating (N)

P = Constant applied radial load (N)

S = Speed (rpm)

Required Dynamic Load Rating

To calculate the required dynamic load rating for a specific application the following formula (C3.)

$$DLR = 0.054 \times P \times (L_{10} \times S)^{0.3}$$

Where,

L_{10} = Life (Million revolutions)

DLR = Dynamic load rating (N)

P = Constant applied radial load (N)

S = Speed (rpm)

Design Considerations

Design Considerations

The following selection is designed to act as a guide to use of UNASIS metric cam followers and yoke rollers within application.

The information provided acts as mere guidance based on previous experience and industry knowledge. Proper selection and implementation of the specific bearing product is the responsibility of the customer.

For specific enquiries and unusual application please contact UNASIS to discuss your specific requirements.

Type Of Load

All load ratings and calculations assume a constant and even load. When encountering applications with shock and/or vibration type loads a bearing with the greatest possible load capacity within the given design envelope should be selected.

To estimate the load requirement of the bearing within an application with shock and/or vibration type loading use the below table of multiplication factors.

Load Type	Multiplication factor
Uniform and Constant	1
Light Shock	1.5
Medium Shock	2
Heavy Shock	3

The application bearing load should be multiplied by the appropriate factor and resulting value then used to calculate the approximate L_{10} using the procedure outlined on page 5.

Bearing Spacing

In certain applications it is sometimes desirable or even necessary for bearings to be spaced closely together or next to each other. In applications where the bearings are to be spaced up to a bearing width apart or less it is advisable to have a degree of matching between the bearing pair.

Matching bearing enables loads to be distributed more evenly across the bearings in the application. Matched concentricity and sphericity reduces the risk of high spots causing uneven load distribution and therefore potential reduced life.

Bearing matching is achieved by reducing and controlling tolerances on a number of bearing aspects such as the outer diameter of the bearings. The outer races are specifically selected to minimise variation across batches and bearing internal clearance is controlled by special selection of needle rolling element to maintain constant clearance.

Temperature

Temperatures in applications can drastically effect the capacity of both a bearings load and speed.

As an applications temperature increase the bearings rating decreases. The rate at which this decrease occurs depends upon the type of material the bearing is constructed from. Chrome Steel, Stainless Steel, Tool Steel and even some exotic alloys have all been employed to overcome temperature complications.

Even when a temperature is within the capacity of the material in its own right the expansion of the material lead to further restrictions such as a reduced radial clearance between the rollers and raceways which can lead to the rolling element skidding, spalling and seizing.

Design Considerations

Bearing Fits

Bearing fits are tolerances specified so that correct operation of a bearing is achieved under a given load and or temperature.

The fitting dimensions specified in this publication serve as a guide to a typical fit selection on a typical application where bearings are subject to normal loads under standard operating conditions.

If the bearing is to be subjected to operating conditions outside of normal parameters fits will need to be changed accordingly. For example if the bearing is subjected to high loading then it is advisable to apply a tighter housing and shaft fit than would normally be applied. Similarly it would be advisable to relax the fits on a higher temperature application. Other factors to consider that affect bearing loads include, but are not limited to speed, vibration, housing material, shaft material and maintenance.

For bearing fits on applications that fall outside of the typical parameters please contact UNASIS for more recommendations.

Lubrication

Lubrication is an essential element to bearings. Good lubrication can prolong bearing life which means less maintenance and less machine down time.

Lubrication used is as varied as the applications the bearings are placed within. UNASIS metric cam followers and yoke rollers come greased as standard with a Lithium based soap grease. This is only suitable for applications under standard operating conditions. We would be happy to advise you on any specific requirements.

Considerations when deciding upon a grease specification include the type of sealing, load, environment, temperature and application specific requirements e.g. smooth running.

Oil lubrication can offer a suitable alternative to the traditional use of grease. The primary concern when selecting an oil for lubricating a cam follower or yoke roller is the oil viscosity level.

An appropriate oil will be resistant to oxidation, gumming and have a low volatility.

When using oil lubrication is important not to over supply the bearing as unlike a grease oils are susceptible to churning motion. The churning action can generate unwanted heat leading to other potential

complications.

When selecting lubrication the ease of which re-lubrication can be achieved should be considered. UNASIS metric cam followers come with 2 lubrication access points as standard. Lubrication can be performed via grease nipples inserted into either stud end or the hex head end drive of the bearing, further details of this feature on page 9.

Handling

In order to achieve maximum life from a bearing it is of utmost importance that cleanliness and precision are observed at all stages.

Bearings should not be handled without gloves or protection as naturally occurring greases and oils from skin can cause corrosion of the bearing within a relatively small space of time. Particularly on non corrosion resistant materials or exposed surfaces.

Precaution should be taken to only remove a bearing from is packaging when ready to be installed. This reduces the chance of contamination from foreign particles which could cause bearing failures.

Accuracy and care should be taken when installing a bearing to reduce chance of failures. The use of specialist bearing tools for the installation and removal of bearings is always paramount.

Special Features

Double Lock-Nut

⇒ Extra Security to ensure the Cam Follower is locked into place

⇒ Both nuts are included

Black Oxide Coating

⇒ All external surfaces are coated

⇒ Provides extended life by impeding rust

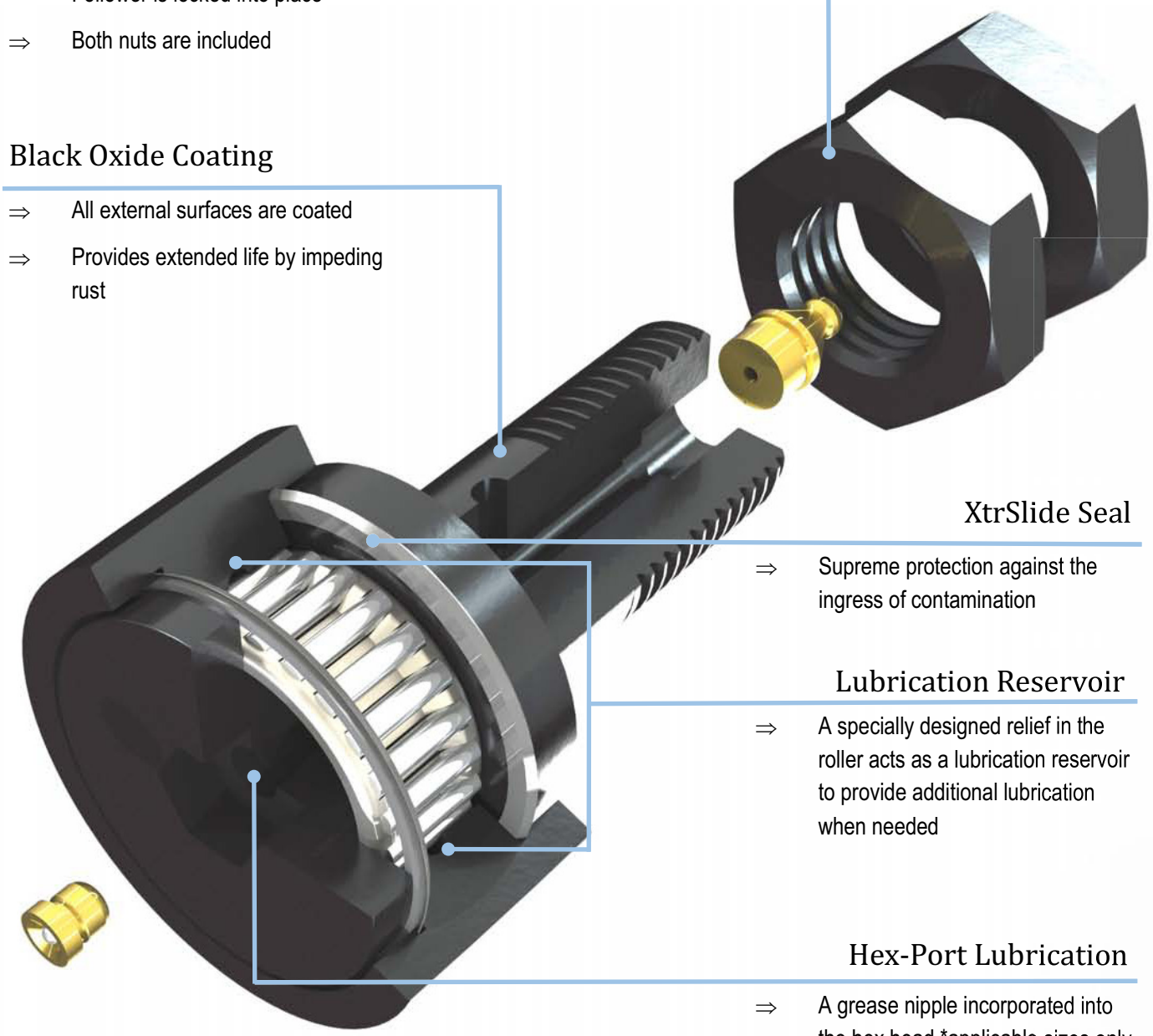

XtrSlide Seal

⇒ Supreme protection against the ingress of contamination

Lubrication Reservoir

⇒ A specially designed relief in the roller acts as a lubrication reservoir to provide additional lubrication when needed

Hex-Port Lubrication

⇒ A grease nipple incorporated into the hex head *applicable sizes only

⇒ Provides a more accessible point for lubrication when installed into application

Hex-Port Lubrication

Unlike many cam follower manufacturers UNASIS metric cam followers permit lubrication through 2 different ports including the head of the stud on hex drive types. This feature allows for far easier re-lubrication of the bearing once it is mounted in application.

As a grease nipple is incorporated in both the head and the stud it provides no protrusion or obstruction whilst in application. This in turn provides vast space saving as designs will no longer have to account for a large grease nipple that traditionally would have provided an obstruction.

The Hex-Port lubrication grease nipples come preinstalled in UNASIS cam-followers to save time. However, an additional grease nipple and a grease plug are supplied so the stud can either be plugged or accessed in future depending on each individual application requirement.

By allowing lubrication through the hex head customers are able to reduce their inventory as the Hex-Port lubrication feature by-passes the need for to stock slot head or unsealed cam followers.

UNASIS cam followers are completely interchangeable with familiar brand sizes. This now means you can have a top specification cam or yoke roller with all the necessary features from a single brand. A full copy of the part number interchanges can be found in the rear of this catalogue.

UNASIS cam followers and yoke rollers are designed for use in a variety of applications from printing to canning, from packaging to construction equipment.

UNASIS cam followers begin at 13mm. The Hex-Port lubrication feature comes as standard on selected UNASIS cam followers.

If you have any questions or special requirements please feel free to contact us.

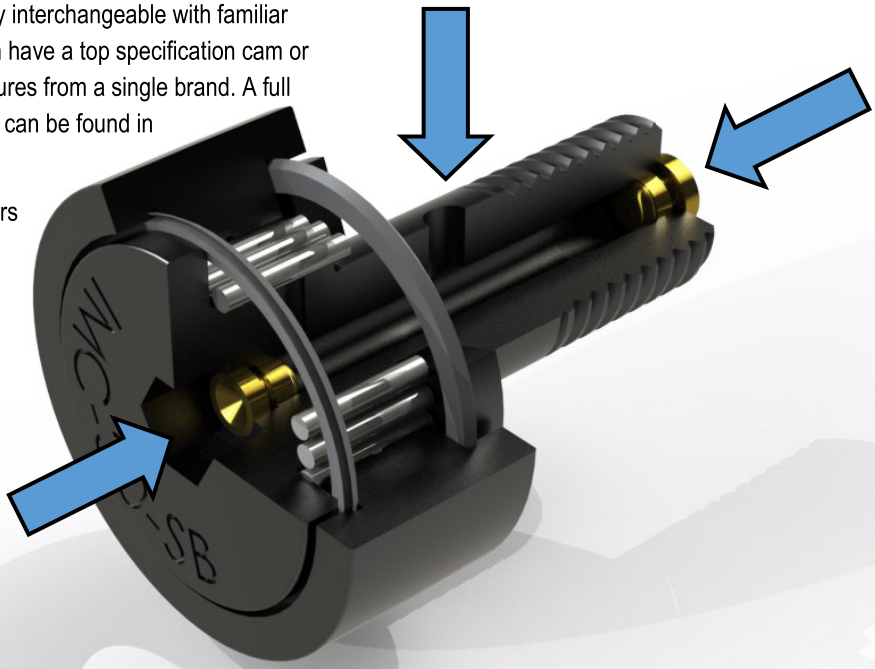

XtrSlide Seal

Seals on bearings retain lubrication which in turn increases bearing life and performance. The seals prevent the ingress of contamination into the bearing. This reduces premature failure and also loss of lubrication which can lead to various complications.

UNASIS XtrSlide Seals add an additional benefit of wear reduction. By adding a lubricant element to the counter bore face of the inner race and the flange of the outer race.

By lubricating these surfaces it reduces operating temperatures. Re-lubrication intervals and component wear can all be dramatically reduced whilst limiting speeds can be increased.

All UNASIS Cam followers come sealed as standard.

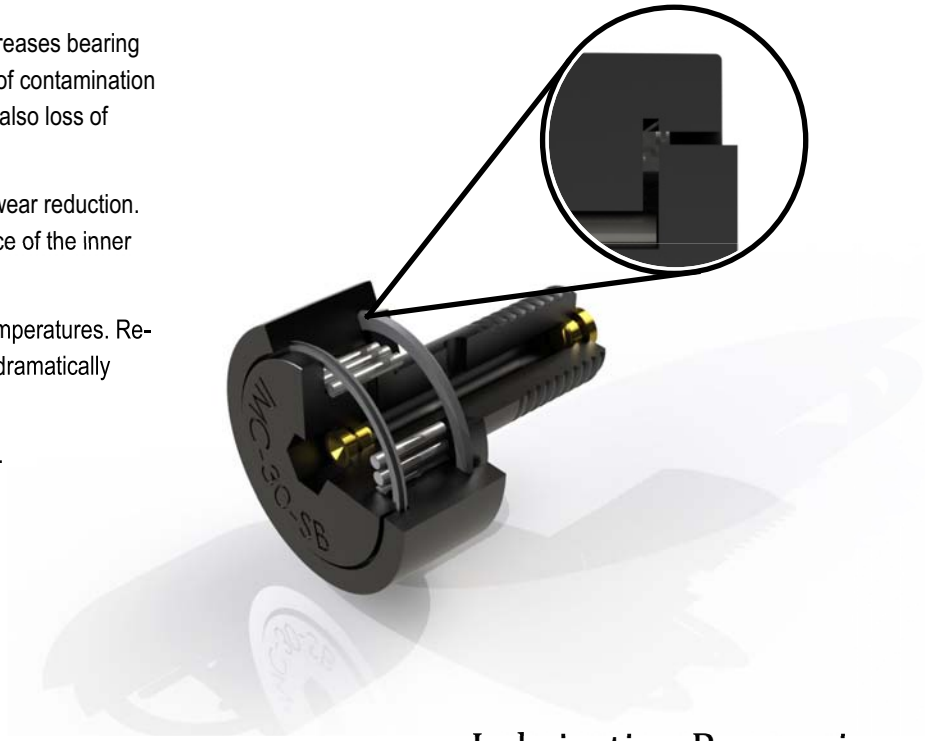

Lubrication Reservoir

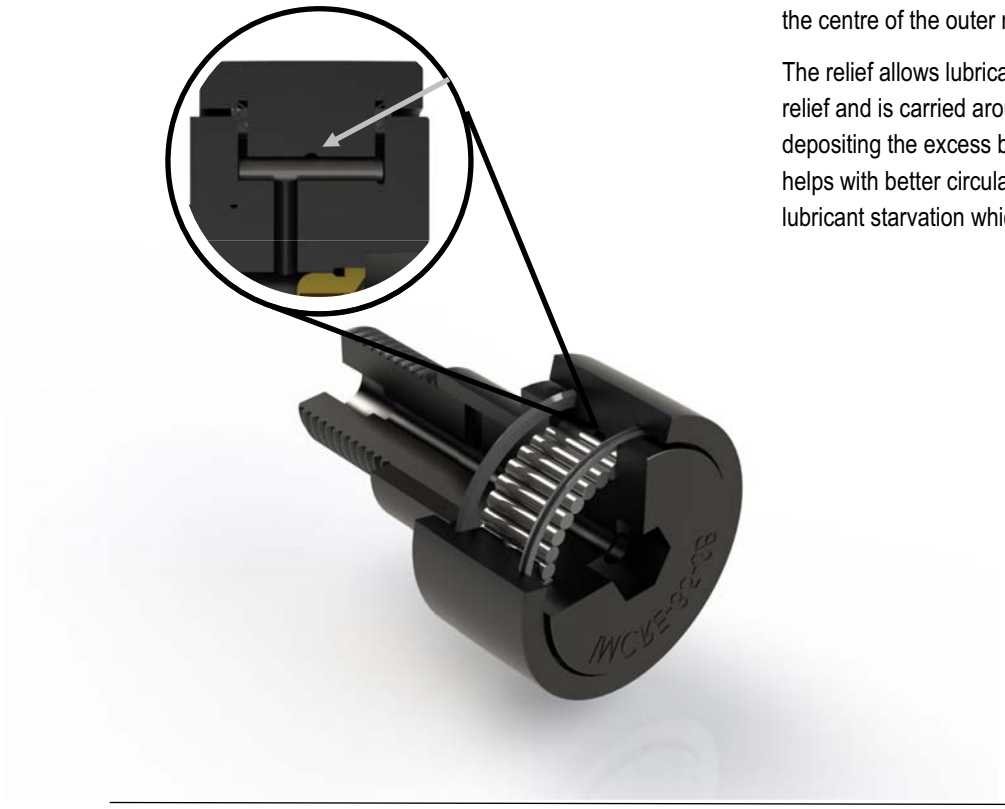

All UNASIS cam and yoke rollers have a specially designed relief on the centre of the outer raceway to act as a lubricant reservoir.

The relief allows lubricant to be picked by the needle as it passes the relief and is carried around the bearing coating all surfaces and depositing the excess back into the relief groove. The relief in turn helps with better circulation of lubricant within the bearing preventing lubricant starvation which can lead to premature failure of a bearing.

Black Oxide Coating

Unlike many manufacturers, UNASIS cam and yoke roller bearings come with all external components black oxide coated as standard.

The black oxide coating provides a greatly improved corrosion resistance in comparison to an uncoated high chrome steel bearing which in turn provides an increased life expectancy from the bearing.

Best practice when handling bearings of any kind is always to ensure that prior to fitting the components are clean, clear of any dirt or metal swarf. Gloves should be worn to avoid the transfer of oils or containments from even the cleanest hands. Sufficient precaution should be taken to remove corrosive materials from installation area.

The black oxide coating can help protect against some mishandling whilst fitting potentially saving on replacing mishandled bearings.

Hex Head Drive

UNASIS metric cam followers all come with a hexagonal hole on the head end replacing what traditionally would have been a screw driver slot type head. This has a number of advantages over the traditional slot head type cam followers including, but not limited to, easier mounting and the ability to achieve greater thread torque values. The table below shows the size of hex head drive to suit.

Basic Bearing Number	Hex Wrench Size (mm)	Basic Bearing Number	Hex Wrench Size (mm)
13	3	40	8
16	4	47	10
19	4	52	10
22	4	62	14
26	4	72	14
30	6	80	14
32	6	85	14
35	8	90	14

Eccentric Collar

Eccentric collars are a popular alternative to the need for high tolerances between holes along the same track allowing bearing to be easily adjusted.

In-line arrangements of eccentric collar bearings can easily be altered to either increase or decrease height to alignment rows of bearings depending upon requirements. This means loading can be spread far more easily across the entire line of the bearings reducing service requirements and the need for highly precise and uniform machining of housing components.

Bearings can easily be locked in place by a locknut but if there is a requirement for more positive means of securing the bearing in place then a dowel drilled through the housing to meet the bush would be the most suitable means of fastening.

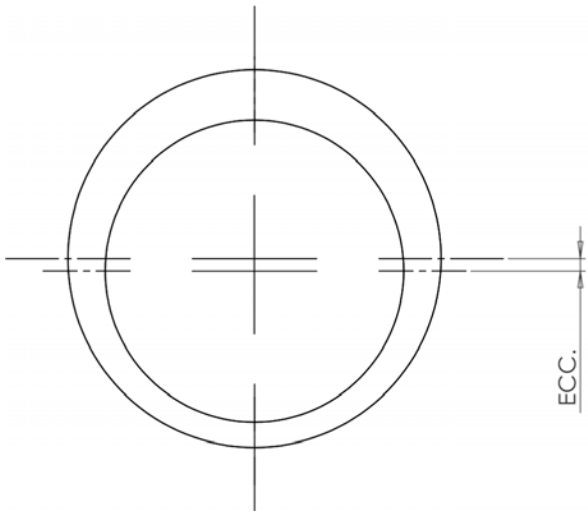

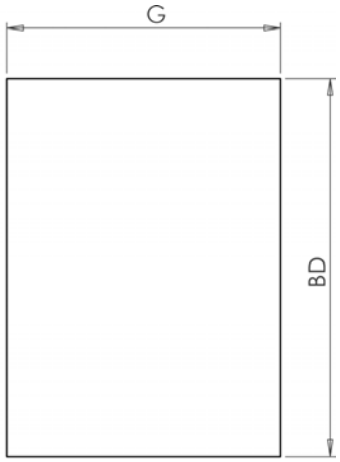

Size	G	Size		Eccentricity (ECC)	Recommended Housing Bore
	+0.05 -0.15				+0.025 -0.000
mm	mm	Min (mm)	Max (mm)	mm	mm
16	7	8.964	9.000	0.5	9.050
19	9	10.957	11.000	0.5	11.050
22	10	12.957	13.000	0.5	13.050
26	10	12.957	13.000	0.5	13.050
30	11	14.957	15.000	0.5	15.050
32	11	14.957	15.000	0.5	15.050
35	14	19.948	20.000	1.0	20.050
40	16	21.948	22.000	1.0	22.050
47	18	23.948	24.000	1.0	24.050
52	18	23.948	24.000	1.0	24.050
62	22	27.948	28.000	1.0	28.050
72	22	27.948	28.000	1.0	28.050
80	29	34.938	35.000	1.5	35.050
85	29	34.938	35.000	1.5	35.050
90	29	34.938	35.000	1.5	35.050

Load Capacity Comparison

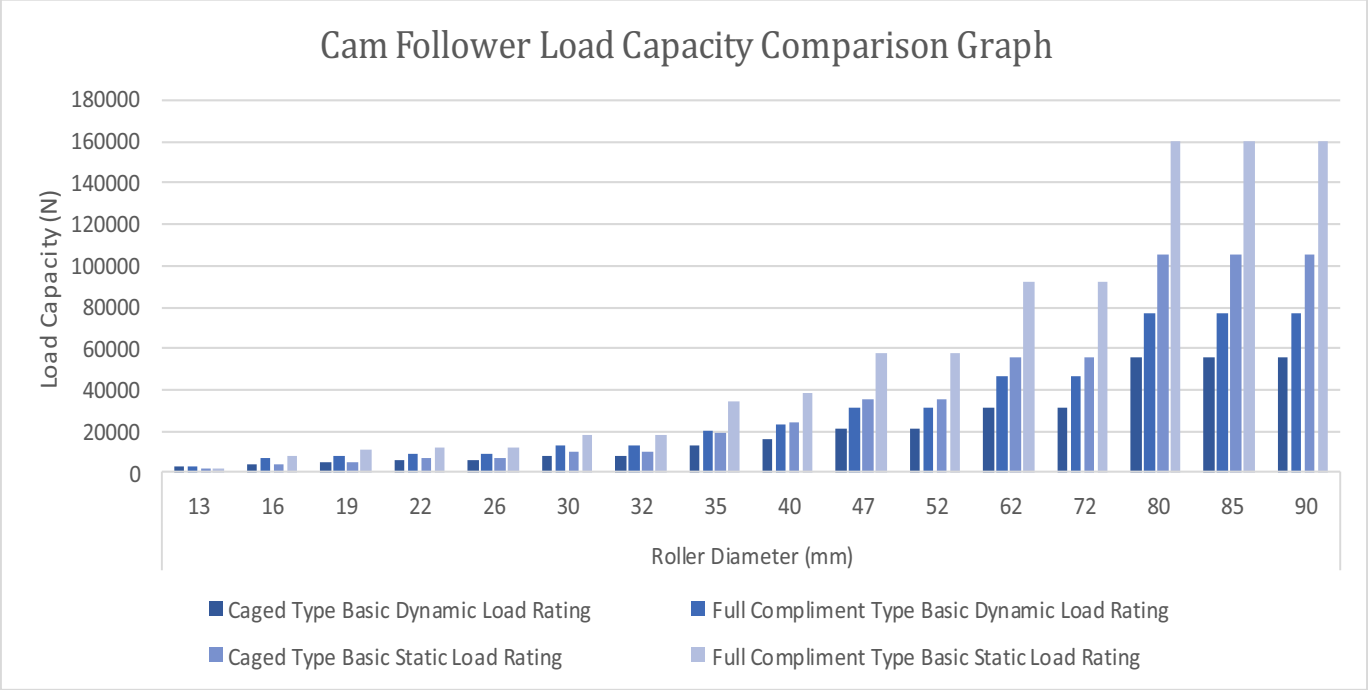

Roller Diameter (mm)	Caged Type Basic Dynamic	Full Compliment Type Basic	Caged Type Basic Static	Full Compliment Type Basic
	Load Capacity (N)			
13	2450	2450	2260	2260
16	4120	6960	4120	8340
19	4510	8040	5000	10490
22	6280	9410	7260	12360
26	6280	9410	7260	12360
30	8240	13240	9710	18140
32	8240	13240	9710	18140
35	13040	20300	19030	34130
40	15990	23240	23730	38540
47	21280	30790	35700	57670
52	21280	30790	35700	57670
62	31680	46580	55700	92630
72	31680	46580	55700	92630
80	56000	76980	105030	159850
85	56000	76980	105030	159850
90	56000	76980	105030	159850

Speed Capacity Comparison

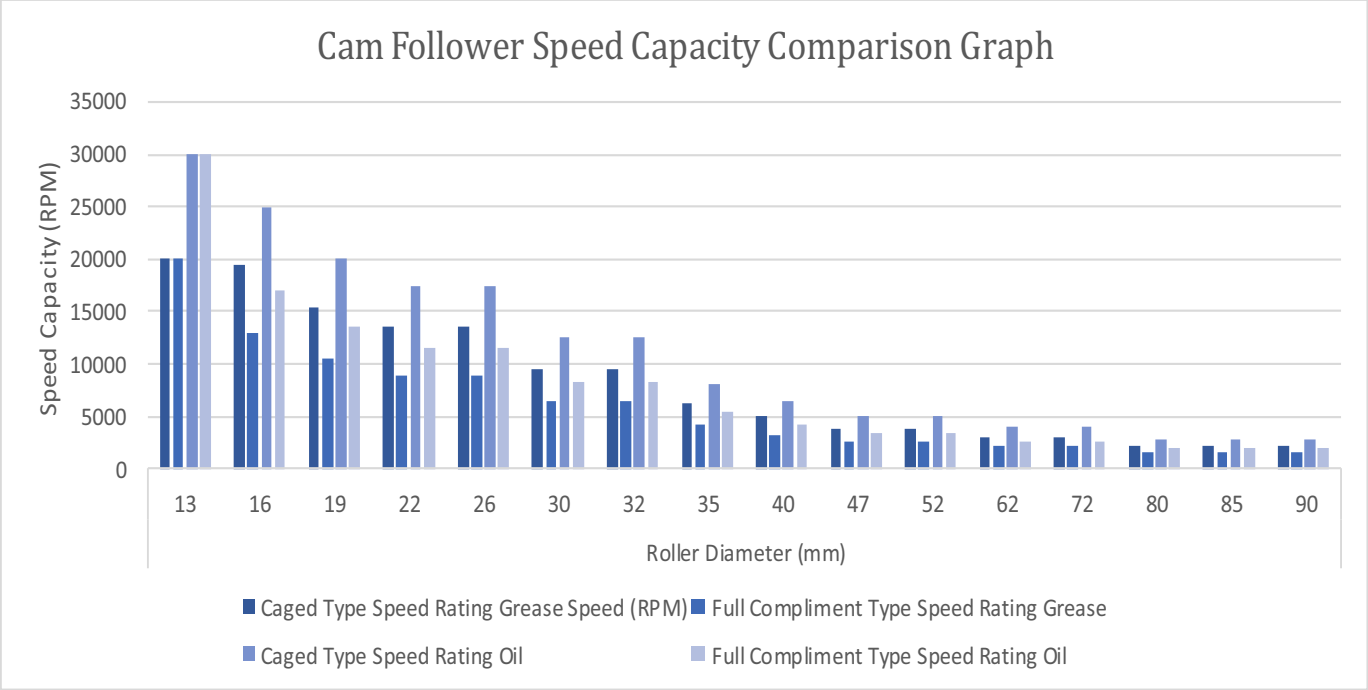

Roller Diameter (mm)	Caged Type Speed Rating Grease	Full Compliment Type Speed Rating Grease	Caged Type Speed Rating Oil	Full Compliment Type Speed Rating Oil
	Speed (RPM)			
13	20000	20000	30000	30000
16	19500	13000	25000	17000
19	15500	10500	20000	13500
22	13500	9000	17500	11500
26	13500	9000	17500	11500
30	9600	6400	12500	8300
32	9600	6400	12500	8300
35	6300	4200	8000	5500
40	5000	3300	6400	4300
47	3900	2600	5000	3400
52	3900	2600	5000	3400
62	3100	2100	4100	2700
72	3100	2100	4100	2700
80	2200	1500	2900	2000
85	2200	1500	2900	2000
90	2200	1500	2900	2000

Load Capacity Comparison

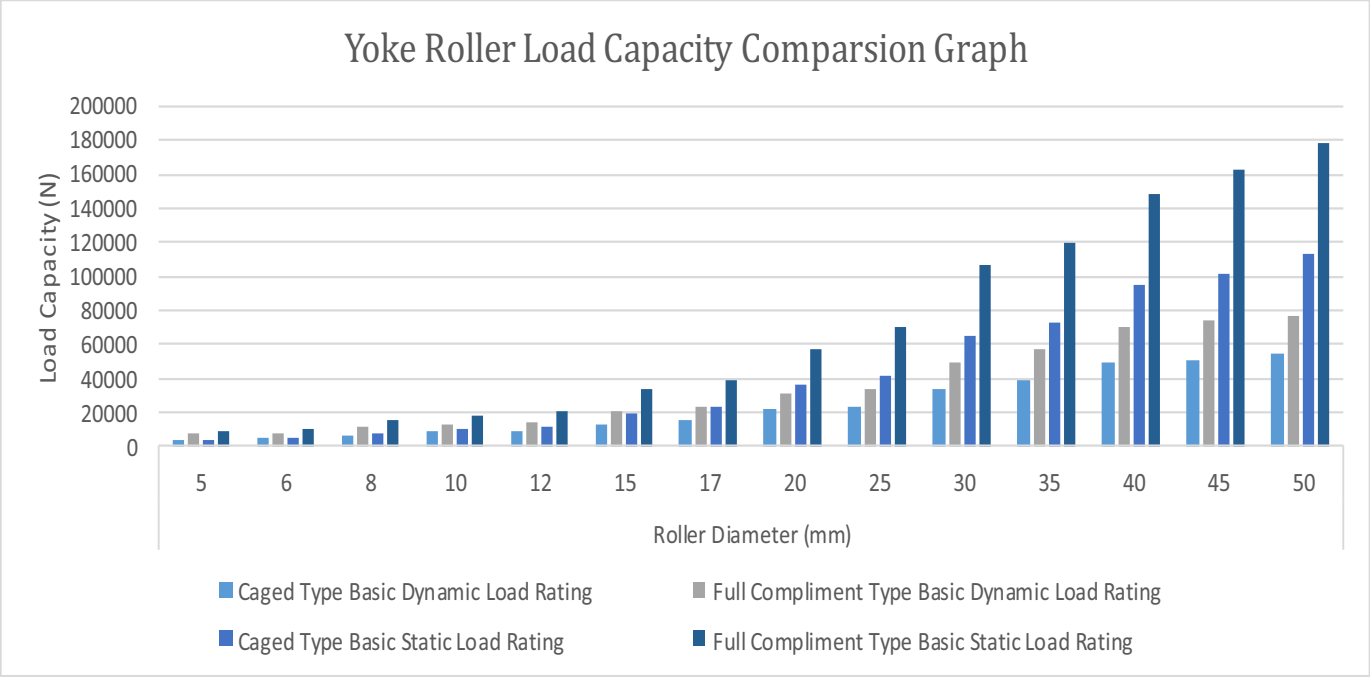

Roller Diameter (mm)	Caged Type Basic Dynamic Load Rating	Full Compliment Type Basic Dynamic Load Rating	Caged Type Basic Static Load Rating	Full Compliment Type Basic Static Load Rating
	Load Capacity (N)			
5	4120	6960	4120	8340
6	4510	8040	5000	10490
8	6860	11470	7750	15200
10	8240	13340	9710	18240
12	8730	14420	10890	20890
15	13040	20300	19030	34130
17	15990	23240	23730	38540
20	21280	30790	35700	57670
25	22950	34130	41780	70410
30	34030	49720	65120	107290
35	38930	56880	72960	120230
40	49720	70020	94440	147990
45	51190	73750	101010	163190
50	54720	77180	113570	178390

Speed Capacity Comparison

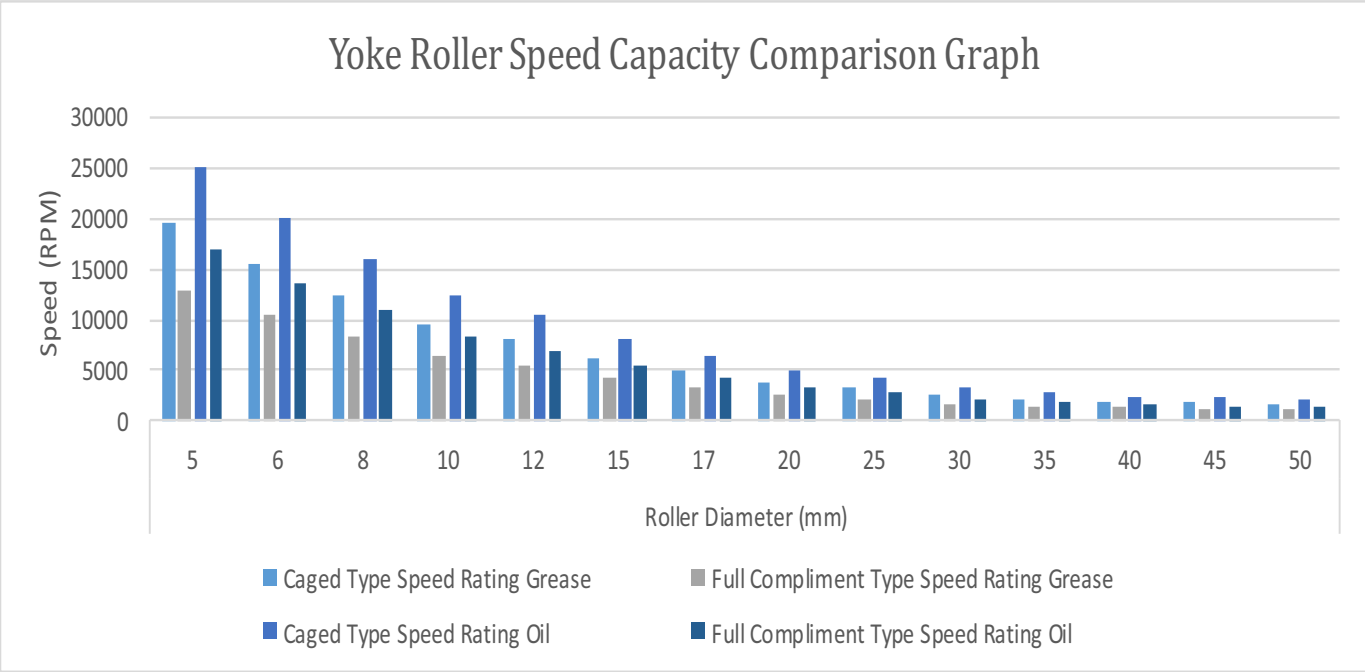

Roller Diameter (mm)	Caged Type Speed Rating Grease	Full Compliment Type Speed Rating Grease	Caged Type Speed Rating Oil	Full Compliment Type Speed Rating Oil
	Speed (RPM)			
5	19500	13000	25000	17000
6	15500	10500	20000	13500
8	12500	8400	16000	11000
10	9600	6400	12500	8300
12	8100	5400	10500	7000
15	6300	4200	8200	5400
17	4900	3300	6400	4300
20	3900	2600	5000	3400
25	3300	2200	4300	2900
30	2500	1700	3200	2200
35	2200	1500	2800	1900
40	1900	1300	2400	1700
45	1800	1200	2300	1500
50	1600	1100	2000	1400

Application and Installation Guide

Application

Cam follower and yoke rollers can used interchangeably in many applications. Their usage is normally dependant upon the users preference to either use a straddle or yoke-type mounting arrangement.

For applications with great loads it would be advisable to use a yoke roller where possible as it negates any issues of stud deflection and ultimately the yoke capacity then becomes dictated by the shear strength of the mounted shaft.

In general the use of a cam follower bearing is preferred in most applications due to the relative ease of installation as the user needs only drill and tap a suitable mounting hole in the support housing.

Cam followers and yoke rollers provide an economic, easily mountable and versatile solution to many track roller, guide roller, load support roller and cam applications. They are particularly effective in applications of the translation of rotary movement to axial motion or linear motion. Due to the accuracy to which cam and yoke rollers are manufactured they can easily be installed in a series provided the holes in the support housing are adequately aligned. This will ensure that the load is shared equally through the series. Where it is not possible or great accuracy is required an additional eccentric bushing or collar can be fitted to the cam follower stud which, when mounted into the adapted housing bore gives great flexibility on mounting height and more controlled distribution of the load.

Installation

When considering the mounting of a cam follower or yoke roller each individual application must be considered on its own merits and taken in its own context. Factors such as operating environment, conditions, lubrication requirements or loading requirements can all have major effects on the operating results.

Considerations when mounting cam followers or yoke rollers:

- ⇒ Housing and support shaft are fit to deal with the intended loading
- ⇒ Ensure the housing face is flat and square to the housing bore.
- ⇒ Chamfers should not exceed 0.5mm
- ⇒ Avoid excessive torque when tightening clamping nuts.
- ⇒ Yoke Rollers must be positively clamped on both ends of the side washers

Due to the individual characteristics of each application the information in this publication is to be used as a guideline only. Feel free to get in touch with us for your specific application requirements.

Track Rollers

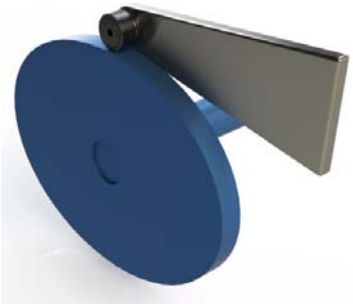

External Cam Applications

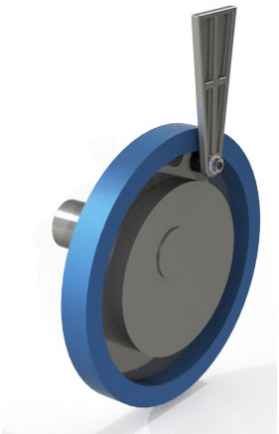

Internal Cam Applications

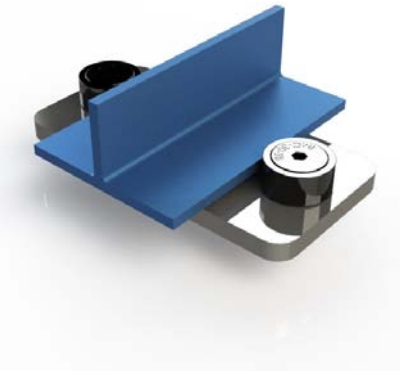

Track Guide Rollers

Application and Installation Guide

Preferred, acceptable installation method — When yoke rollers are mounted in this orientation
load ratings do apply

The illustrations below serve as examples of the preferred methods of installation of yoke rollers.
Both sides of the assembly are supported evenly. As such both end plates have sufficient support and are secure therefore will not dis-assemble. In this mounting configuration the bearing is sufficiently supported so that it may withstand the fully specified load limits

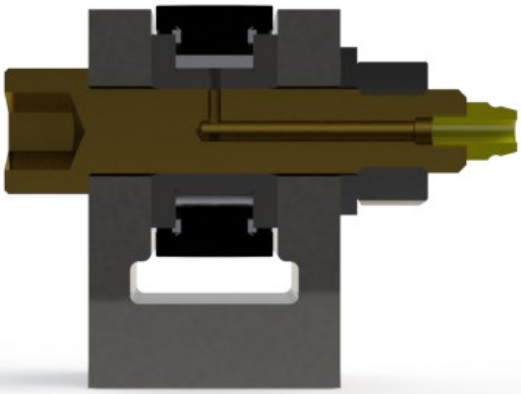

Preferred, acceptable installation method — When yoke rollers are mounted in this orientation
load ratings do apply

As above this a preferential way to mount yoke rollers with sufficient clamping on both sides so that full load ratings can be achieved. This arrangement has the additional benefit of an extended collar placed within the housing. This is beneficial because when the bearing is clamped into position the housing wont be mis-shaped and will remain square to the bearing.

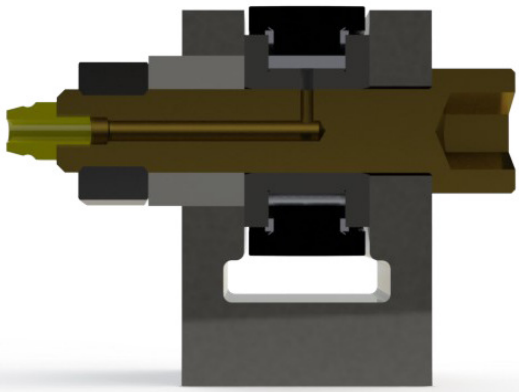

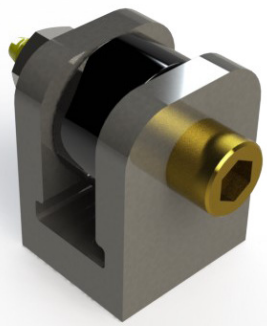

Application and Installation Guide

Not preferred but acceptable installation method — When yoke rollers are mounted in this orientation

load ratings do not apply

Whilst the images below represent an acceptable method of installation for a yoke roller, it is not the preferred method and therefore not endorsed. If radial loads are too great the bearing can tip and bind. It is important to note that this mounting configuration needs a washer when clamping the end plate. In this situation the recommendation would be to go for a cam follower.

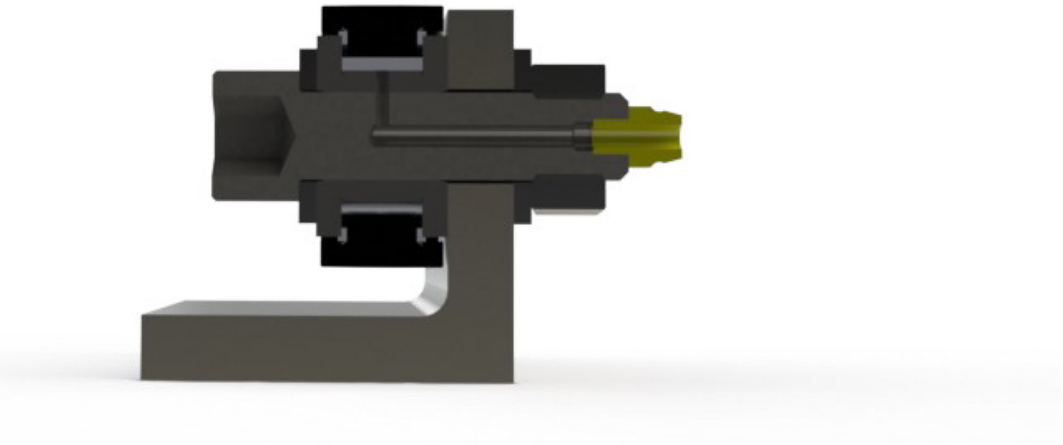

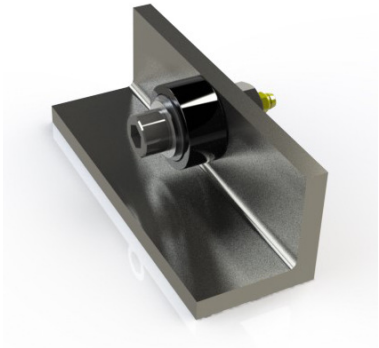

Not preferred and not acceptable installation method — When yoke rollers are mounted in this orientation

load ratings do not apply

The below example is the incorrect mounting method. Larger loads may cause the bearing to tip and bind but also the lack of washer on the stud means that the endplate is not correctly secured and the bearing may disassemble whilst in application. The preferred configuration would be to use a cam follower in this application.

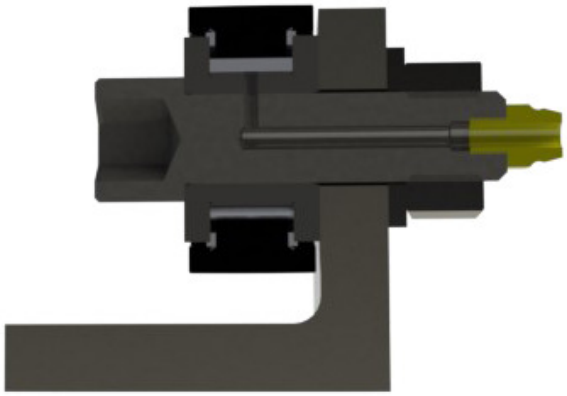

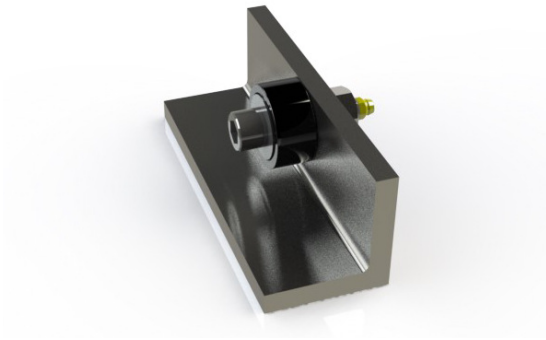

Application and Installation Guide

Preferred, acceptable installation method — When cam followers are mounted in this orientation load ratings do apply

The illustration to the right indicates the preferred method of assembly for a UNASIS cam follower.

Sufficient support is given to the shaft via a through bore prior to the threaded section.

The endplate is secured by clamping against a boss on the housing to ensure that the bearing will not disassemble. Whilst the boss is not essential it is preferred to ensure clearance between the housing and the running surface. If the bearing is clamped directly against housing it is possible that housing may bind or interfere with the outer roller.

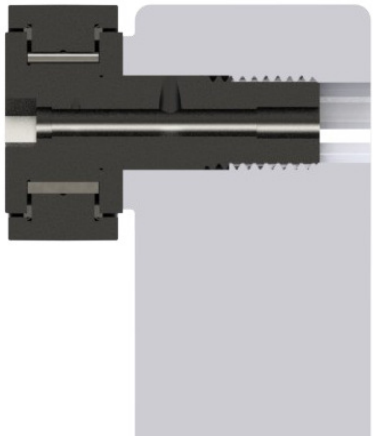

Not preferred and not acceptable installation method — When cam followers are mounted in this orientation load ratings do not apply

The illustration to the bottom right outlines the incorrect cam follower installation procedure.

Due to the insufficient support given to the shaft in this orientation excessive axial loading forces may cause the stud to bend.

There is no clamping on the end plate. This lack of clamping means the endplate is not secure and therefore may disassemble during operation.

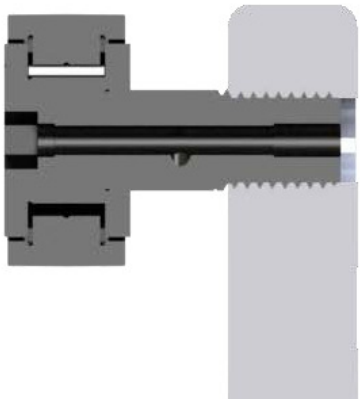

Part Numbering System

Type	Retaining option	Special Feature		Standard Features		Roller Surface Options	Resulting Part Number
Cam follower	Cage		Roller OD	Sealed	Hexagonal Head	Crowned OD	IMCR-XX-SB
						Cylindrical OD	IMCR-XX-SBX
	Full Compliment		Roller OD	Sealed	Hexagonal Head	Crowned OD	IMC-XX-SB
						Cylindrical OD	IMC-XX-SBX
Eccentric Cam follower	Cage	Eccentric Collar	Roller OD	Sealed	Hexagonal Head	Crowned OD	IMCRE-XX-SB
						Cylindrical OD	IMCRE-XX-SBX
	Full Compliment	Eccentric Collar	Roller OD	Sealed	Hexagonal Head	Crowned OD	IMCE-XX-SB
						Cylindrical OD	IMCE-XX-SBX
Stainless Steel Cam Follower	Cage	Stainless Steel Construction	Roller OD	Sealed	Hexagonal Head	Crowned OD	SMCR-XX-SB
						Cylindrical OD	SMCR-XX-SBX
	Full Compliment	Stainless Steel Construction	Roller OD	Sealed	Hexagonal Head	Crowned OD	SMC-XX-SB
						Cylindrical OD	SMC-XX-SBX
Heavy Duty Cam Follower	Full Compliment	Double Row Cylindrical Rollers	Roller OD	Sealed	Hexagonal Head	Crowned OD	IMCH-XX-SB
						Cylindrical OD	IMCH-XX-SBX
Yoke Roller	Cage		Roller OD	Sealed	Hexagonal Head	Crowned OD	IMYR-XX-SB
						Cylindrical OD	IMYR-XX-SBX
	Full Compliment		Roller OD	Sealed	Hexagonal Head	Crowned OD	IMY-XX-SB
						Cylindrical OD	IMY-XX-SBX
Stainless Steel Yoke Roller	Cage	Stainless Steel Construction	Roller OD	Sealed	Hexagonal Head	Crowned OD	SMYR-XX-SB
						Cylindrical OD	SMYR-XX-SBX
	Full Compliment	Stainless Steel Construction	Roller OD	Sealed	Hexagonal Head	Crowned OD	SMY-XX-SB
						Cylindrical OD	SMY-XX-SBX
Heavy Duty Yoke Roller	Full Compliment	Double Row Cylindrical Rollers	Roller OD	Sealed	Hexagonal Head	Crowned OD	IMYH-XX-SB
						Cylindrical OD	IMYH-XX-SBX

Full Compliment Standard Cam Follower

STUD TYPE

Series IMC — Unsealed, full compliment

Series IMC-SB — Sealed, full compliment

Product Specification Options

Material	No symbol	Steel
Roller Guide	No symbol	Full Compliment
Seal Structure	SB	Sealed
	No Symbol	Unsealed
Roller Design	No Symbol	Crowned OD
	X	Cylindrical OD

Size	Part Numbers	Roller		Stud				Lubrication		
	Sealed Bearing Part Number	A	B	C	D	E	F	G	H	J
		Roller OD	Roller Width	Stud Dia.	Stud Length	Thread Length	Thread Class	Oil Hole Centre	Oil Hole Dia.	Lube Fitting Size
mm		mm	mm	mm	mm	mm		mm	mm	
13	**IMC-13-SB**	13	9	5	13.0	7.5	M5X0.8	-	-	3.1
16	**IMC-16-SB**	16	11	6	16.0	9.0	M6X1	-	-	4.0
19	**IMC-19-SB**	19	11	8	20.0	11.0	M8X1.25	-	-	4.0
22	**IMC-22-SB**	22	12	10	23.0	12.0	M10X1	-	-	4.0
26	**IMC-26-SB**	26	12	10	23.0	12.0	M10X1	-	-	4.0
30	**IMC-30-SB**	30	14	12	25.0	14.0	M12X1.5	6	3	6.0
32	**IMC-32-SB**	32	14	12	25.0	14.0	M12X1.5	6	3	6.0
35	**IMC-35-SB**	35	18	16	32.5	18.0	M16X1.5	8	3	6.0
40	**IMC-40-SB**	40	20	18	36.5	19.0	M18X1.5	8	3	6.0
47	**IMC-47-SB**	47	24	20	40.5	21.0	M20X1.5	9	4	8.0
52	**IMC-52-SB**	52	24	20	40.5	21.0	M20X1.5	9	4	8.0
62	**IMC-62-SB**	62	29	24	49.5	25.0	M24X1.5	11	4	8.0
72	**IMC-72-SB**	72	29	24	49.5	25.0	M24X1.5	11	4	8.0
80	**IMC-80-SB**	80	35	30	63.0	32.0	M30X1.5	15	4	8.0
85	**IMC-85-SB**	85	35	30	63.0	32.0	M30X1.5	15	4	8.0
90	**IMC-90-SB**	90	35	30	63.0	32.0	M30X1.5	15	4	8.0

*The standard UNASIS metric cam-follower comes with hexagonal head with hex-port, seals and crowned outer roller diameter

*Cylindrical roller surface is available, include and "X" suffix in the part number e.g. IMC-62-X, IMC-62-SX, IMC-62-SBX, please refer to the part numbering section

Full Compliment Standard Cam Follower

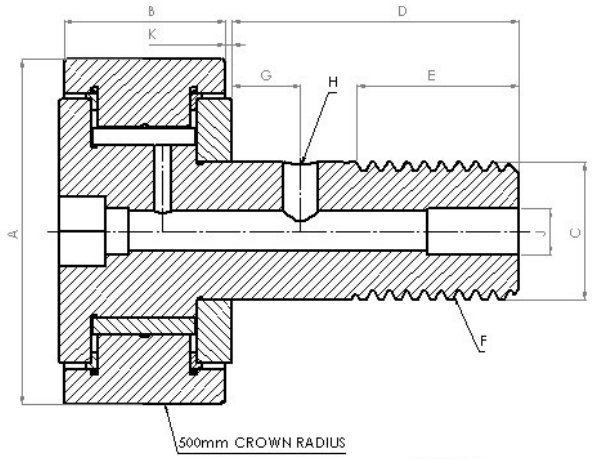

Size	Part Numbers	Fitting Dimensions			Speed		Load Ratings		Mass
	Sealed Bearing Part Number	Corner Radius	Clamping Dia. Min	Clamping Torque Max	Grease	Oil	Dynamic	Static	
mm		mm	mm	Nm	rpm	rpm	N	N	kg
13	**IMC-13-SB**	0.3	9	2.2	20000	30000	2450	2260	0.010
16	**IMC-16-SB**	0.3	11	3	13000	17000	6960	8340	0.019
19	**IMC-19-SB**	0.3	13	8	10500	13500	8040	10490	0.029
22	**IMC-22-SB**	0.5	15	15	9000	11500	9410	12360	0.044
26	**IMC-26-SB**	0.5	15	15	9000	11500	9410	12360	0.056
30	**IMC-30-SB**	1.0	19	22	6400	8300	13240	18140	0.089
32	**IMC-32-SB**	1.0	19	22	6400	8300	13240	18140	0.099
35	**IMC-35-SB**	1.0	24	57	4200	5500	20300	34130	0.171
40	**IMC-40-SB**	6.0	27	85	3300	4300	23240	38540	0.248
47	**IMC-47-SB**	8.0	30	118	2600	3400	30790	57670	0.393
52	**IMC-52-SB**	8.0	30	118	2600	3400	30790	57670	0.455
62	**IMC-62-SB**	8.0	38	216	2100	2700	46580	92630	0.810
72	**IMC-72-SB**	8.0	38	216	2100	2700	46580	92630	1.048
80	**IMC-80-SB**	8.0	51	441	1500	2000	76980	159850	1.642
85	**IMC-85-SB**	8.0	51	441	1500	2000	76980	159850	1.814
90	**IMC-90-SB**	8.0	51	441	1500	2000	76980	159850	2.002

*Limiting Speeds shown in the table above should be used as a guideline only as each individual application and load scenario will vary. The figures given assume bearings operating within optimal conditions only.

*Clamping torque is based on dry threads only. If the threads are lubricated, use half the values shown.

Caged Standard Cam Follower

STUD TYPE

Series IMCR — Unsealed, caged type

Series IMCR-SB — Sealed, caged type

Product Specification Options

Material	No symbol	Steel
Roller Guide	R	Caged
Seal Structure	SB	Sealed
	No Symbol	Unsealed
Roller Design	No Symbol	Crowned OD
	X	Cylindrical OD

Size	Part Numbers	Roller		Stud				Lubrication		
	Sealed Bearing Part Number	A	B	C	D	E	F	G	H	J
		Roller OD	Roller Width	Stud Dia.	Stud Length	Thread Length	Thread Class	Oil Hole Centre	Oil Hole Dia.	Lube Fitting Size
mm		mm	mm	mm	mm	mm		mm	mm	
13	**IMCR-13-SB**	13	9	5	13.0	7.5	M5X0.8	-	-	3.1
16	**IMCR-16-SB**	16	11	6	16.0	9.0	M6X1	-	-	4.0
19	**IMCR-19-SB**	19	11	8	20.0	11.0	M8X1.25	-	-	4.0
22	**IMCR-22-SB**	22	12	10	23.0	12.0	M10X1	-	-	4.0
26	**IMCR-26-SB**	26	12	10	23.0	12.0	M10X1	-	-	4.0
30	**IMCR-30-SB**	30	14	12	25.0	14.0	M12X1.5	6	3	6.0
32	**IMCR-32-SB**	32	14	12	25.0	14.0	M12X1.5	6	3	6.0
35	**IMCR-35-SB**	35	18	16	32.5	18.0	M16X1.5	8	3	6.0
40	**IMCR-40-SB**	40	20	18	36.5	19.0	M18X1.5	8	3	6.0
47	**IMCR-47-SB**	47	24	20	40.5	21.0	M20X1.5	9	4	8.0
52	**IMCR-52-SB**	52	24	20	40.5	21.0	M20X1.5	9	4	8.0
62	**IMCR-62-SB**	62	29	24	49.5	25.0	M24X1.5	11	4	8.0
72	**IMCR-72-SB**	72	29	24	49.5	25.0	M24X1.5	11	4	8.0
80	**IMCR-80-SB**	80	35	30	63.0	32.0	M30X1.5	15	4	8.0
85	**IMCR-85-SB**	85	35	30	63.0	32.0	M30X1.5	15	4	8.0
90	**IMCR-90-SB**	90	35	30	63.0	32.0	M30X1.5	15	4	8.0

*The standard UNASIS metric cam follower comes with hexagonal broached head port, seals and crowned outer roller diameter

*Cylindrical roller surface is available, include and "X" suffix in the part number e.g. IMCR-62-X and IMCR-62-SBX, please refer to the part numbering section

Caged Standard Cam Follower

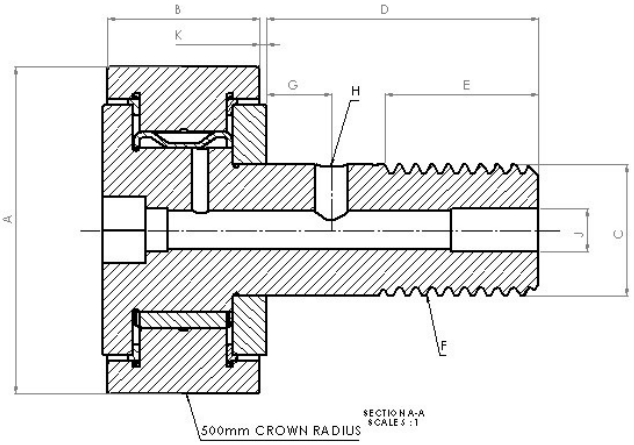

Size	Part Numbers	Fitting Dimensions			Speed		Load Ratings		Mass
	Sealed Bearing Part Number	Corner Radius	Clamping Dia. Min	Clamping Torque Max	Grease	Oil	Dynamic	Static	
mm		mm	mm	Nm	rpm	rpm	N	N	kg
13	**IMCR-13-SB**	0.3	9	2.2	20000	30000	2450	2260	0.010
16	**IMCR-16-SB**	0.3	11	3	19500	25000	4120	4120	0.018
19	**IMCR-19-SB**	0.3	13	8	15500	20000	4510	5000	0.028
22	**IMCR-22-SB**	0.5	15	15	13500	17500	6280	7260	0.043
26	**IMCR-26-SB**	0.5	15	15	13500	17500	6280	7260	0.055
30	**IMCR-30-SB**	1.0	19	22	9600	12500	8240	9710	0.087
32	**IMCR-32-SB**	1.0	19	22	9600	12500	8240	9710	0.096
35	**IMCR-35-SB**	1.0	24	57	6300	8000	13040	19030	0.166
40	**IMCR-40-SB**	6.0	27	85	5000	6400	15990	23730	0.245
47	**IMCR-47-SB**	8.0	30	118	3900	5000	21280	35700	0.387
52	**IMCR-52-SB**	8.0	30	118	3900	5000	21280	35700	0.453
62	**IMCR-62-SB**	8.0	38	216	3100	4100	31680	55700	0.801
72	**IMCR-72-SB**	8.0	38	216	3100	4100	31680	55700	1.039
80	**IMCR-80-SB**	8.0	51	441	2200	2900	56000	105030	1.621
85	**IMCR-85-SB**	8.0	51	441	2200	2900	56000	105030	1.793
90	**IMCR-90-SB**	8.0	51	441	2200	2900	56000	105030	1.981

*Limiting Speeds shown in the table above should be used as a guideline only as each individual application and load scenario will vary. The figures given assume bearings operating within optimal conditions only.

*Clamping torque is based on dry threads only. If the threads are lubricated, use half the values shown.

Full Compliment Cam Follower with Eccentric Collar

STUD TYPE

Series IMCE — Unsealed, full compliment with eccentric collar

Series IMCE-SB — Sealed, full compliment with eccentric collar

Product Specification Options

Material	No symbol	Steel
Roller Guide	No Symbol	Full Compliment
Stud Design	E	Eccentric Collar
Seal Structure	SB	Sealed
	No Symbol	Unsealed
Roller Design	No Symbol	Crowned OD
	X	Cylindrical OD

Size	Part Numbers	Roller		Stud					Lubrication	
		A	B	C	D	E	F	G	H	J
	Sealed Bearing Part Number	Roller OD	Roller Width	Eccentric Collar	Eccentric Collar Dia.	Stud Length	Thread Length	Thread Class	Oil Hole Dia.	Endplate Extension
mm		mm	mm	mm	mm	mm	mm		mm	mm
16	**IMCE-16-SB**	16	11	7	9	16.0	9.0	M6X1	-	0.6
19	**IMCE-19-SB**	19	11	9	11	20.0	11.0	M8X1.25	-	0.6
22	**IMCE-22-SB**	22	12	10	13	23.0	12.0	M10X1	-	0.6
26	**IMCE-26-SB**	26	12	10	13	23.0	12.0	M10X1	-	0.6
30	**IMCE-30-SB**	30	14	11	15	25.0	14.0	M12X1.5	3	0.6
32	**IMCE-32-SB**	32	14	11	15	25.0	14.0	M12X1.5	3	0.6
35	**IMCE-35-SB**	35	18	14	20	32.5	18.0	M16X1.5	3	0.8
40	**IMCE-40-SB**	40	20	16	22	36.5	19.0	M18X1.5	3	0.8
47	**IMCE-47-SB**	47	24	18	24	40.5	21.0	M20X1.5	4	0.8
52	**IMCE-52-SB**	52	24	18	24	40.5	21.0	M20X1.5	4	0.8
62	**IMCE-62-SB**	62	29	22	28	49.5	25.0	M24X1.5	4	0.8
72	**IMCE-72-SB**	72	29	22	28	49.5	25.0	M24X1.5	4	0.8
80	**IMCE-80-SB**	80	35	29	35	63.0	32.0	M30X1.5	4	1
85	**IMCE-85-SB**	85	35	29	35	63.0	32.0	M30X1.5	4	1
90	**IMCE-90-SB**	90	35	29	35	63.0	32.0	M30X1.5	4	1

*The standard UNASIS metric cam-follower comes with hexagonal head with hexport, seals and crowned outer roller diameter

*Cylindrical roller surface is available, include and "X" suffix in the part number e.g. IMCRE-62-X and IMCRE-62-SBX, please refer to the part numbering section

Full Compliment Cam Follower with Eccentric Collar

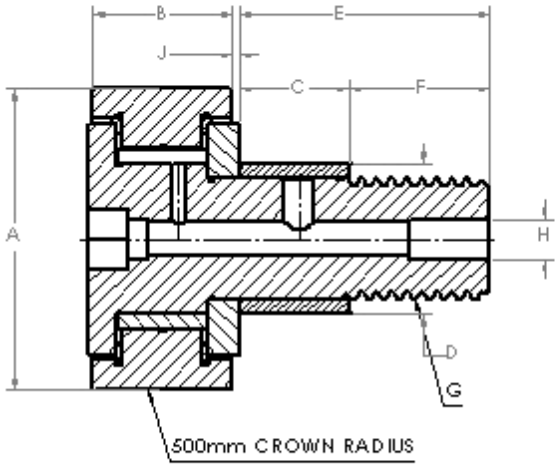

Size	Part Numbers	Fitting Dimensions			Speed		Load Ratings		Mass
	Sealed Bearing Part Number	Corner Radius	Clamping Dia. Min	Clamping Torque Max	Grease	Oil	Dynamic	Static	
mm		mm	mm	Nm	rpm	rpm	N	N	kg
13	**IMCE-13-SB**	0.3	9	2.2	20000	30000	2450	2260	0.010
16	**IMCE-16-SB**	0.3	11	3	13000	17000	6960	8340	0.019
19	**IMCE-19-SB**	0.3	13	8	10500	13500	8040	10490	0.029
22	**IMCE-22-SB**	0.5	15	15	9000	11500	9410	12360	0.044
26	**IMCE-26-SB**	0.5	15	15	9000	11500	9410	12360	0.056
30	**IMCE-30-SB**	1.0	19	22	6400	8300	13240	18140	0.089
32	**IMCE-32-SB**	1.0	19	22	6400	8300	13240	18140	0.099
35	**IMCE-35-SB**	1.0	24	57	4200	5500	20300	34130	0.171
40	**IMCE-40-SB**	6.0	27	85	3300	4300	23240	38540	0.248
47	**IMCE-47-SB**	8.0	30	118	2600	3400	30790	57670	0.393
52	**IMCE-52-SB**	8.0	30	118	2600	3400	30790	57670	0.455
62	**IMCE-62-SB**	8.0	38	216	2100	2700	46580	92630	0.810
72	**IMCE-72-SB**	8.0	38	216	2100	2700	46580	92630	1.048
80	**IMCE-80-SB**	8.0	51	441	1500	2000	76980	159850	1.642
85	**IMCE-85-SB**	8.0	51	441	1500	2000	76980	159850	1.814
90	**IMCE-90-SB**	8.0	51	441	1500	2000	76980	159850	2.002

*Limiting Speeds shown in the table above should be used as a guideline only as each individual application and load scenario will vary. The figures given assume bearings operating within optimal conditions only.

*Clamping torque is based on dry threads only. If the threads are lubricated, use half the values shown.

Caged Cam Follower with Eccentric Collar

STUD TYPE

Series IMCRE — Unsealed, caged type with eccentric collar

Series IMCRE-SB— Sealed, caged type with eccentric collar

Product Specification Options

Material	No symbol	Steel
Roller Guide	R	Caged Type
Stud Design	E	Eccentric Collar
Seal Structure	SB	Sealed
	No Symbol	Unsealed
Roller Design	No Symbol	Crowned OD
	X	Cylindrical OD

Size	Part Numbers	Roller		Stud					Lubrication	
	Sealed Bearing Part Number	A	B	C	D	E	F	G	H	J
		Roller OD	Roller Width	Eccentric Collar Length	Eccentric Collar Dia.	Stud Length	Thread Length	Thread Class	Oil Hole Dia.	Endplate Extension
mm		mm	mm	mm	mm	mm	mm		mm	mm
16	**IMCRE-16-SB**	16	11	7	9	16.0	9.0	M6X1	-	0.6
19	**IMCRE-19-SB**	19	11	9	11	20.0	11.0	M8X1.25	-	0.6
22	**IMCRE-22-SB**	22	12	10	13	23.0	12.0	M10X1	-	0.6
26	**IMCRE-26-SB**	26	12	10	13	23.0	12.0	M10X1	-	0.6
30	**IMCRE-30-SB**	30	14	11	15	25.0	14.0	M12X1.5	3	0.6
32	**IMCRE-32-SB**	32	14	11	15	25.0	14.0	M12X1.5	3	0.6
35	**IMCRE-35-SB**	35	18	14	20	32.5	18.0	M16X1.5	3	0.8
40	**IMCRE-40-SB**	40	20	16	22	36.5	19.0	M18X1.5	3	0.8
47	**IMCRE-47-SB**	47	24	18	24	40.5	21.0	M20X1.5	4	0.8
52	**IMCRE-52-SB**	52	24	18	24	40.5	21.0	M20X1.5	4	0.8
62	**IMCRE-62-SB**	62	29	22	28	49.5	25.0	M24X1.5	4	0.8
72	**IMCRE-72-SB**	72	29	22	28	49.5	25.0	M24X1.5	4	0.8
80	**IMCRE-80-SB**	80	35	29	35	63.0	32.0	M30X1.5	4	1
85	**IMCRE-85-SB**	85	35	29	35	63.0	32.0	M30X1.5	4	1
90	**IMCRE-90-SB**	90	35	29	35	63.0	32.0	M30X1.5	4	1

*The standard UNASIS metric cam-follower comes with hexagonal head with hexport, seals and crowned outer roller diameter
*Cylindrical roller surface is available, include and "X" suffix in the part number e.g. IMCRE-62-X and IMCRE-62-SBX, please refer to the part numbering section

Caged Cam Follower with Eccentric Collar

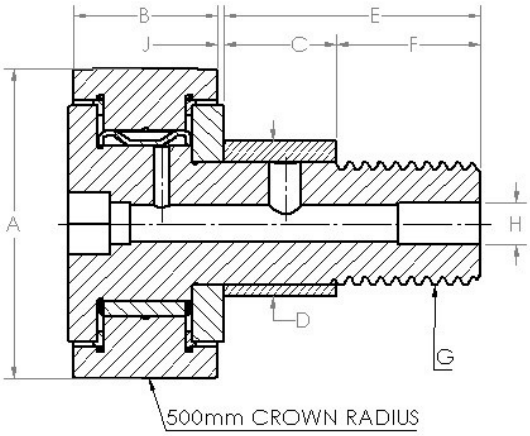

Size	Part Numbers	Fitting Dimensions			Speed		Load Ratings		Mass
	Sealed Bearing Part Number	Corner Radius	Clamping Dia. Min	Clamping Torque Max	Grease	Oil	Dynamic	Static	
mm		mm	mm	Nm	rpm	rpm	N	N	kg
16	**IMCRE-16-SB**	0.3	11	3	19500	25000	4120	4120	0.018
19	**IMCRE-19-SB**	0.3	13	8	15500	20000	4510	5000	0.028
22	**IMCRE-22-SB**	0.5	15	15	13500	17500	6280	7260	0.043
26	**IMCRE-26-SB**	0.5	15	15	13500	17500	6280	7260	0.055
30	**IMCRE-30-SB**	1.0	19	22	9600	12500	8240	9710	0.087
32	**IMCRE-32-SB**	1.0	19	22	9600	12500	8240	9710	0.096
35	**IMCRE-35-SB**	1.0	24	57	6300	8000	13040	19030	0.166
40	**IMCRE-40-SB**	6.0	27	85	5000	6400	15990	23730	0.245
47	**IMCRE-47-SB**	8.0	30	118	3900	5000	21280	35700	0.387
52	**IMCRE-52-SB**	8.0	30	118	3900	5000	21280	35700	0.453
62	**IMCRE-62-SB**	8.0	38	216	3100	4100	31680	55700	0.801
72	**IMCRE-72-SB**	8.0	38	216	3100	4100	31680	55700	1.039
80	**IMCRE-80-SB**	8.0	51	441	2200	2900	56000	105030	1.621
85	**IMCRE-85-SB**	8.0	51	441	2200	2900	56000	105030	1.793
90	**IMCRE-90-SB**	8.0	51	441	2200	2900	56000	105030	1.981

*Limiting Speeds shown in the table above should be used as a guideline only as each individual application and load scenario will vary. The figures given assume bearings operating within optimal conditions only.

*Clamping torque is based on dry threads only. If the threads are lubricated, use half the values shown.

Full Compliment Cam Follower in Stainless Steel

STUD TYPE

Series SMC — Unsealed, full compliment in stainless steel

Series SMC-SB— Sealed, full compliment in stainless steel

Product Specification Options

Material	S	Stainless Steel
Roller Guide	No symbol	Full Compliment
Seal Structure	SB	Sealed
	No Symbol	Unsealed
Roller Design	No Symbol	Crowned OD
	X	Cylindrical OD

Size	Part Numbers	Roller		Stud				Lubrication		
	Sealed Bearing Part Number	A	B	C	D	E	F	G	H	J
		Roller OD	Roller Width	Stud Dia.	Stud Length	Thread Length	Thread Class	Oil Hole Centre	Oil Hole Dia.	Lube Fitting Size
mm		mm	mm	mm	mm	mm		mm	mm	
13	**SMC-13-SB**	13	9	5	13.0	7.5	M5X0.8	-	-	3.1
16	**SMC-16-SB**	16	11	6	16.0	9.0	M6X1	-	-	4.0
19	**SMC-19-SB**	19	11	8	20.0	11.0	M8X1.25	-	-	4.0
22	**SMC-22-SB**	22	12	10	23.0	12.0	M10X1	-	-	4.0
26	**SMC-26-SB**	26	12	10	23.0	12.0	M10X1	-	-	4.0
30	**SMC-30-SB**	30	14	12	25.0	14.0	M12X1.5	6	3	6.0
32	**SMC-32-SB**	32	14	12	25.0	14.0	M12X1.5	6	3	6.0
35	**SMC-35-SB**	35	18	16	32.5	18.0	M16X1.5	8	3	6.0
40	**SMC-40-SB**	40	20	18	36.5	19.0	M18X1.5	8	3	6.0
47	**SMC-47-SB**	47	24	20	40.5	21.0	M20X1.5	9	4	8.0
52	**SMC-52-SB**	52	24	20	40.5	21.0	M20X1.5	9	4	8.0
62	**SMC-62-SB**	62	29	24	49.5	25.0	M24X1.5	11	4	8.0
72	**SMC-72-SB**	72	29	24	49.5	25.0	M24X1.5	11	4	8.0
80	**SMC-80-SB**	80	35	30	63.0	32.0	M30X1.5	15	4	8.0
85	**SMC-85-SB**	85	35	30	63.0	32.0	M30X1.5	15	4	8.0
90	**SMC-90-SB**	90	35	30	63.0	32.0	M30X1.5	15	4	8.0

*The standard UNASIS metric cam-follower comes with hexagonal head with hex-port, seals and crowned outer roller diameter

*Cylindrical roller surface is available, include and "X" suffix in the part number e.g. SMC-62-X and SMC-62-SBX, please refer to the part numbering section

Full Compliment Cam Follower in Stainless Steel

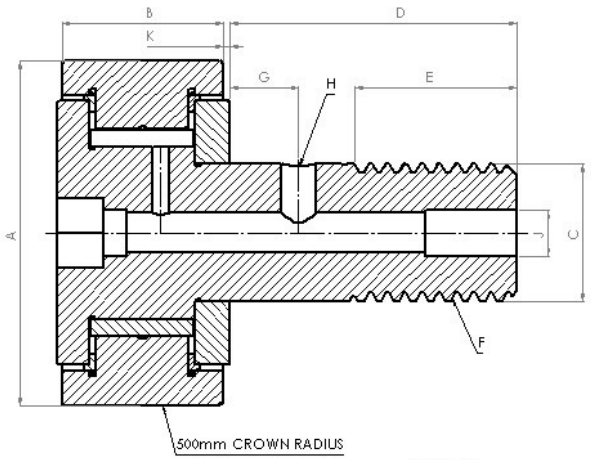

Size	Part Numbers	Fitting Dimensions			Speed		Load Ratings		Mass
	Sealed Bearing Part Number	Corner Radius	Clamping Dia. Min	Clamping Torque Max	Grease	Oil	Dynamic	Static	
mm		mm	mm	Nm	rpm	rpm	N	N	kg
13	**SMC-13-SB**	0.3	9	1.6	18000	27000	2205	2034	0.010
16	**SMC-16-SB**	0.3	11	2.7	11700	15300	6264	7506	0.019
19	**SMC-19-SB**	0.3	13	6.5	9450	12150	7236	9441	0.029
22	**SMC-22-SB**	0.5	15	14.7	8100	10350	8469	11124	0.044
26	**SMC-26-SB**	0.5	15	14.7	8100	10350	8469	11124	0.056
30	**SMC-30-SB**	1.0	19	21.9	5760	7470	11916	16326	0.089
32	**SMC-32-SB**	1.0	19	21.9	5760	7470	11916	16326	0.099
35	**SMC-35-SB**	1.0	24	58.5	3780	4950	18270	30717	0.171
40	**SMC-40-SB**	6.0	27	86.2	2970	3870	20916	34686	0.248
47	**SMC-47-SB**	8.0	30	119	2340	3060	27711	51903	0.393
52	**SMC-52-SB**	8.0	30	119	2340	3060	27711	51903	0.455
62	**SMC-62-SB**	8.0	38	215	1890	2430	41922	83367	0.810
72	**SMC-72-SB**	8.0	38	215	1890	2430	41922	83367	1.048
80	**SMC-80-SB**	8.0	51	438	1350	1800	69282	143865	1.642
85	**SMC-85-SB**	8.0	51	438	1350	1800	69282	143865	1.814
90	**SMC-90-SB**	8.0	51	438	1350	1800	69282	143865	2.002

*Limiting Speeds shown in the table above should be used as a guideline only as each individual application and load scenario will vary. The figures given assume bearings operating within optimal conditions only.

*Clamping torque is based on dry threads only. If the threads are lubricated, use half the values shown.

Caged Cam Follower in Stainless Steel

STUD TYPE

Series SMCR — Unsealed, caged type in stainless steel

Series SMCR-SB— Sealed, caged type in stainless steel

Product Specification Options

Material	S	Stainless Steel
Roller Guide	R	Caged
Seal Structure	SB	Sealed
	No Symbol	Unsealed
Roller Design	No Symbol	Crowned OD
	X	Cylindrical OD

Size	Part Numbers	Roller		Stud				Lubrication		
	Sealed Bearing Part Number	A	B	C	D	E	F	G	H	J
		Roller OD	Roller	Stud Dia.	Stud	Thread	Thread	Oil Hole	Oil Hole	Lube
mm		mm	mm	mm	mm	mm		mm	mm	
13	**SMCR-13-SB**	13	9	5	13.0	7.5	M5X0.8	-	-	3.1
16	**SMCR-16-SB**	16	11	6	16.0	9.0	M6X1	-	-	4.0
19	**SMCR-19-SB**	19	11	8	20.0	11.0	M8X1.25	-	-	4.0
22	**SMCR-22-SB**	22	12	10	23.0	12.0	M10X1	-	-	4.0
26	**SMCR-26-SB**	26	12	10	23.0	12.0	M10X1	-	-	4.0
30	**SMCR-30-SB**	30	14	12	25.0	14.0	M12X1.5	6	3	6.0
32	**SMCR-32-SB**	32	14	12	25.0	14.0	M12X1.5	6	3	6.0
35	**SMCR-35-SB**	35	18	16	32.5	18.0	M16X1.5	8	3	6.0
40	**SMCR-40-SB**	40	20	18	36.5	19.0	M18X1.5	8	3	6.0
47	**SMCR-47-SB**	47	24	20	40.5	21.0	M20X1.5	9	4	8.0
52	**SMCR-52-SB**	52	24	20	40.5	21.0	M20X1.5	9	4	8.0
62	**SMCR-62-SB**	62	29	24	49.5	25.0	M24X1.5	11	4	8.0
72	**SMCR-72-SB**	72	29	24	49.5	25.0	M24X1.5	11	4	8.0
80	**SMCR-80-SB**	80	35	30	63.0	32.0	M30X1.5	15	4	8.0
85	**SMCR-85-SB**	85	35	30	63.0	32.0	M30X1.5	15	4	8.0
90	**SMCR-90-SB**	90	35	30	63.0	32.0	M30X1.5	15	4	8.0

*The standard UNASIS metric cam-follower comes with hexagonal head port, seals and crowned outer roller diameter

*Cylindrical roller surface is available, include and "X" suffix in the part number e.g. SMCR-62-X and SMCR-62-SBX, please refer to the part numbering section

Caged Cam Follower in Stainless Steel

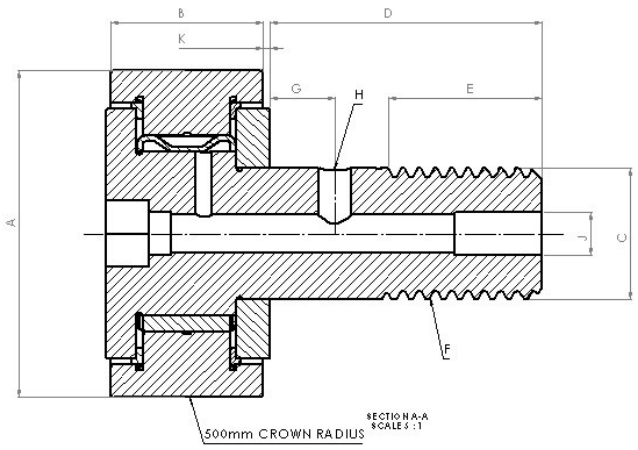

Size	Part Numbers	Fitting Dimensions			Speed		Load Ratings		Mass
	Sealed Bearing Part Number	Corner Radius	Clamping Dia. Min	Clamping Torque Max	Grease	Oil	Dynamic	Static	
mm		mm	mm	Nm	rpm	rpm	N	N	kg
13	**SMCR-13-SB**	0.3	9	1.6	18000	27000	2205	2034	0.010
16	**SMCR-16-SB**	0.3	11	2.7	17550	22500	3708	3708	0.018
19	**SMCR-19-SB**	0.3	13	6.5	13950	18000	4059	4500	0.028
22	**SMCR-22-SB**	0.5	15	14.7	12150	15750	5652	6534	0.043
26	**SMCR-26-SB**	0.5	15	14.7	12150	15750	5652	6534	0.055
30	**SMCR-30-SB**	1.0	19	21.9	8640	11250	7416	8739	0.087
32	**SMCR-32-SB**	1.0	19	21.9	8640	11250	7416	8739	0.096
35	**SMCR-35-SB**	1.0	24	58.5	5670	7200	11736	17127	0.166
40	**SMCR-40-SB**	6.0	27	86.2	4500	5760	14391	21357	0.245
47	**SMCR-47-SB**	8.0	30	119	3510	4500	19152	32130	0.387
52	**SMCR-52-SB**	8.0	30	119	3510	4500	19152	32130	0.453
62	**SMCR-62-SB**	8.0	38	215	2790	3690	28512	50130	0.801
72	**SMCR-72-SB**	8.0	38	215	2790	3690	28512	50130	1.039
80	**SMCR-80-SB**	8.0	51	438	1980	2610	50400	94527	1.621
85	**SMCR-85-SB**	8.0	51	438	1980	2610	50400	94527	1.793
90	**SMCR-90-SB**	8.0	51	438	1980	2610	50400	94527	1.981

*Limiting Speeds shown in the table above should be used as a guideline only as each individual application and load scenario will vary. The figures given assume bearings operating within optimal conditions only.

*Clamping torque is based on dry threads only. If the threads are lubricated, use half the values shown.

Full Compliment Cam Follower with Heavy Duty Cylindrical Rollers

STUD TYPE

Series IMCH — Unsealed, full compliment with cylindrical rollers

Series IMCH-SB — Sealed, full compliment with cylindrical roller

Product Specification Options

Material	I	Steel
Roller Guide	No symbol	Full Compliment
Needle Design	H	Cylindrical Roller
Seal Structure	SB	Sealed
	No Symbol	Unsealed
Roller Design	No Symbol	Crowned OD
	X	Cylindrical OD

Size	Part Numbers	Roller		Stud				Lubrication		
	Sealed Bearing Part Number	A	B	C	D	E	F	G	H	J
		Roller OD	Roller Width	Stud Dia.	Stud Length	Thread Length	Thread Class	Oil Hole Centre	Oil Hole Dia.	Lube Fitting Size
mm		mm	mm	mm	mm	mm		mm	mm	
35	**IMCH-35-SB**	35	18	16	32.5	17.0	M16X1.5	8	3	6.0
40	**IMCH-40-SB**	40	20	18	36.5	19.0	M18X1.5	8	3	6.0
47	**IMCH-47-SB**	47	24	20	40.5	21.0	M20X1.5	9	4	8.0
52	**IMCH-52-SB**	52	24	20	40.5	21.0	M20X1.5	9	4	8.0
62	**IMCH-62-SB**	62	29	24	49.5	25.0	M24X1.5	11	4	8.0
72	**IMCH-72-SB**	72	29	24	49.5	25.0	M24X1.5	11	4	8.0
80	**IMCH-80-SB**	80	35	30	63.0	32.0	M30X1.5	15	4	8.0
90	**IMCH-90-SB**	90	35	30	63.0	32.0	M30X1.5	15	4	8.0

*The standard UNASIS metric cam-follower comes with hexagonal head port, seals and crowned outer roller diameter

*Cylindrical roller surface is available, include and "X" suffix in the part number e.g. IMCH-62-X and IMCH-62-SBX, please refer to the part numbering section

Full Compliment Cam Follower with Heavy Duty Cylindrical Rollers

Size	Part Numbers	Fitting Dimensions		Speed		Load Ratings		Mass
	Sealed Bearing Part Number	Corner Radius	Clamping Torque Max	Grease	Oil	Dynamic	Static	
mm		mm	Nm	rpm	rpm	N	N	kg
35	**IMCH-35-SB**	0.6	57	6500	8500	23000	27000	0.165
40	**IMCH-40-SB**	1.0	85	5500	7200	25000	31000	0.242
47	**IMCH-47-SB**	1.0	118	4200	5500	38000	48000	0.380
52	**IMCH-52-SB**	1.0	118	3400	4400	42000	57000	0.450
62	**IMCH-62-SB**	1.0	216	2600	3400	58000	76000	0.795
72	**IMCH-72-SB**	1.1	216	2100	2700	64000	8900	1.010
80	**IMCH-80-SB**	1.1	441	1800	2300	94000	129000	1.540
90	**IMCH-90-SB**	1.1	441	1800	2300	94000	129000	1.960

*Limiting Speeds shown in the table above should be used as a guideline only as each individual application and load scenario will vary. The figures given assume bearings operating within optimal conditions only.

*Clamping torque is based on dry threads only. If the threads are lubricated, use half the values shown.

Full Compliment Standard Yoke Roller

STUD TYPE

Series IMY — Unsealed, full compliment

Series IMY-S — Sealed, full compliment

Product Specification Options

Material	No symbol	Steel
Roller Guide	No symbol	Full Compliment
Seal Structure	S	Sealed
	No Symbol	Unsealed
Roller Design	No Symbol	Crowned OD
	X	Cylindrical OD

Size	Part Numbers		Roller						Corner Radius
	Unsealed Bearing Part Number	Sealed Bearing Part Number	A	B		C	D		
			Roller OD	Bore Dia.		Roller Width	Total Width		
mm			mm	Min (mm)	Max (mm)	mm	Min (mm)	Max (mm)	mm
5	**IMY-5**	**IMY-5-S**	16	4.992	5.000	11	12	11.82	0.3
6	**IMY-6**	**IMY-6-S**	19	5.992	6.000	11	12	11.82	0.3
8	**IMY-8**	**IMY-8-S**	24	7.992	8.000	14	15	14.82	0.5
10	**IMY-10**	**IMY-10-S**	30	9.992	10.000	14	15	14.82	1
12	**IMY-12**	**IMY-12-S**	32	11.992	12.000	14	15	14.82	1
15	**IMY-15**	**IMY-15-S**	35	14.992	15.000	18	19	18.79	1
17	**IMY-17**	**IMY-17-S**	40	16.992	17.000	20	21	20.79	1.5
20	**IMY-20**	**IMY-20-S**	47	19.990	20.000	24	25	24.79	1.5
25	**IMY-25**	**IMY-25-S**	52	24.990	25.000	24	25	24.79	1.5
30	**IMY-30**	**IMY-30-S**	62	29.990	30.000	28	29	28.79	1.5
35	**IMY-35**	**IMY-35-S**	72	34.988	35.000	28	29	28.79	2
40	**IMY-40**	**IMY-40-S**	80	39.988	40.000	30	32	31.75	2
45	**IMY-45**	**IMY-45-S**	85	44.988	45.000	30	32	31.75	2
50	**IMY-50**	**IMY-50-S**	90	49.988	50.000	30	32	31.75	2

*Cylindrical roller surface is available, include and "X" suffix in the part number e.g. IMY-62-X and IMY-62-SX, please refer to the part numbering section

*The standard UNASIS metric yoke roller comes with seals and crowned outer roller diameter

Full Compliment Standard Yoke Roller

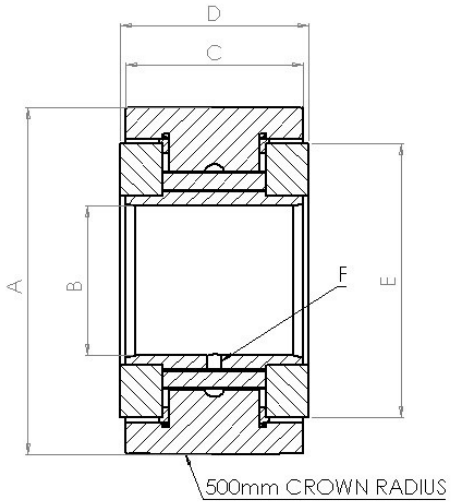

Size	Part Numbers		Mounting Dimensions					Speed		Load Ratings		Mass
	Unsealed Bearing Part Number	Sealed Bearing Part Number	Shaft Diameter				E	Grease	Oil	Dynamic	Static	
			Loose Fit for Light Loads (g6)		Light Transition Fit for Medium Loads (h6)		Clamping Dia. Min					
mm			Min (mm)	Max (mm)	Min (mm)	Max (mm)	mm	rpm	rpm	N	N	kg
5	**IMY-5**	**IMY-5-S**	4.988	4.996	4.992	5	11	13000	17000	6960	8340	0.014
6	**IMY-6**	**IMY-6-S**	5.988	5.996	5.992	6	13	10500	13500	8040	10490	0.021
8	**IMY-8**	**IMY-8-S**	7.986	7.995	7.991	8	16	8400	11000	11470	15200	0.043
10	**IMY-10**	**IMY-10-S**	9.986	9.995	9.991	10	19	6400	8300	13340	18240	0.062
12	**IMY-12**	**IMY-12-S**	11.983	11.994	11.989	12	21	5400	7000	14420	20890	0.069
15	**IMY-15**	**IMY-15-S**	14.983	14.994	14.989	15	24	4200	5400	20300	34130	0.105
17	**IMY-17**	**IMY-17-S**	16.983	16.994	16.989	17	27	3300	4300	23240	38540	0.153
20	**IMY-20**	**IMY-20-S**	19.980	19.993	19.987	20	30	2600	3400	30790	57670	0.255
25	**IMY-25**	**IMY-25-S**	24.980	24.993	24.987	25	36	2200	2900	34130	70410	0.284
30	**IMY-30**	**IMY-30-S**	29.980	29.993	29.987	30	44	1700	2200	49720	107290	0.476
35	**IMY-35**	**IMY-35-S**	34.975	34.991	34.984	35	52	1500	1900	56880	120230	0.649
40	**IMY-40**	**IMY-40-S**	39.975	39.991	39.984	40	58	1300	1700	70020	147990	0.845
45	**IMY-45**	**IMY-45-S**	44.975	44.991	44.984	45	63	1200	1500	73750	163190	0.924
50	**IMY-50**	**IMY-50-S**	49.975	49.991	49.984	50	68	1100	1400	77180	178390	0.984

*Limiting Speeds shown in the table above should be used as a guideline only as each individual application and load scenario will vary. The figures given assume bearings operating within optimal conditions only.

Caged Standard Yoke Roller

STUD TYPE

Series IMYR — Unsealed, caged type

Series IMYR-S — Sealed, caged type

Product Specification Options

Material	No symbol	Steel
Roller Guide	R	Caged
Seal Structure	S	Sealed
	No Symbol	Unsealed
Roller Design	No Symbol	Crowned OD
	X	Cylindrical OD

Size	Part Numbers		Roller						Corner Radius
	Unsealed Bearing Part Number	Sealed Bearing Part Number	A	B		C	D		
			Roller OD	Bore Dia.		Roller Width	Total Width		
mm			mm	Min (mm)	Max (mm)	mm	Min (mm)	Max (mm)	mm
5	**IMYR-5**	**IMYR-5-S**	16	4.992	5.000	11	12	11.82	0.3
6	**IMYR-6**	**IMYR-6-S**	19	5.992	6.000	11	12	11.82	0.3
8	**IMYR-8**	**IMYR-8-S**	24	7.992	8.000	14	15	14.82	0.5
10	**IMYR-10**	**IMYR-10-S**	30	9.992	10.000	14	15	14.82	1
12	**IMYR-12**	**IMYR-12-S**	32	11.992	12.000	14	15	14.82	1
15	**IMYR-15**	**IMYR-15-S**	35	14.992	15.000	18	19	18.79	1
17	**IMYR-17**	**IMYR-17-S**	40	16.992	17.000	20	21	20.79	1.5
20	**IMYR-20**	**IMYR-20-S**	47	19.990	20.000	24	25	24.79	1.5
25	**IMYR-25**	**IMYR-25-S**	52	24.990	25.000	24	25	24.79	1.5
30	**IMYR-30**	**IMYR-30-S**	62	29.990	30.000	28	29	28.79	1.5
35	**IMYR-35**	**IMYR-35-S**	72	34.988	35.000	28	29	28.79	2
40	**IMYR-40**	**IMYR-40-S**	80	39.988	40.000	30	32	31.75	2
45	**IMYR-45**	**IMYR-45-S**	85	44.988	45.000	30	32	31.75	2
50	**IMYR-50**	**IMYR-50-S**	90	49.988	50.000	30	32	31.75	2

*Cylindrical roller surface is available, include and "X" suffix in the part number e.g. IMY-62-X and IMY-62-SX, please refer to the part numbering section

*The standard UNASIS metric yoke roller comes with seals and crowned outer roller diameter

Caged Standard Yoke Roller

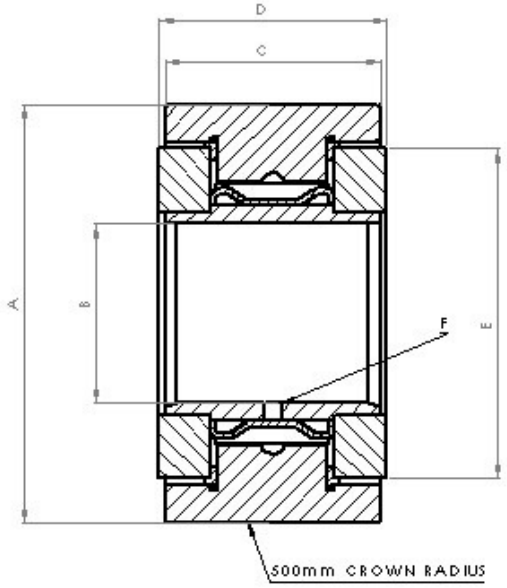

Size	Part Numbers		Mounting Dimensions					Speed		Load Ratings		Mass
	Unsealed Bearing Part Number	Sealed Bearing Part Number	Shaft Diameter				E	Grease	Oil	Dynamic	Static	
			Loose Fit for Light Loads (g6)		Light Transition Fit for Medium Loads (h6)		Clamping Dia. Min					
mm			Min (mm)	Max (mm)	Min (mm)	Max (mm)	mm	rpm	rpm	N	N	kg
5	**IMYR-5**	**IMYR-5-S**	4.988	4.996	4.992	5	11	19500	25000	4120	4120	0.011
6	**IMYR-6**	**IMYR-6-S**	5.988	5.996	5.992	6	13	15500	20000	4510	5000	0.018
8	**IMYR-8**	**IMYR-8-S**	7.986	7.995	7.991	8	16	12500	16000	6860	7750	0.040
10	**IMYR-10**	**IMYR-10-S**	9.986	9.995	9.991	10	19	9600	12500	8240	9710	0.060
12	**IMYR-12**	**IMYR-12-S**	11.983	11.994	11.989	12	21	8100	10500	8730	10890	0.067
15	**IMYR-15**	**IMYR-15-S**	14.983	14.994	14.989	15	24	6300	8200	13040	19030	0.102
17	**IMYR-17**	**IMYR-17-S**	16.983	16.994	16.989	17	27	4900	6400	15990	23730	0.150
20	**IMYR-20**	**IMYR-20-S**	19.980	19.993	19.987	20	30	3900	5000	21280	35700	0.252
25	**IMYR-25**	**IMYR-25-S**	24.980	24.993	24.987	25	36	3300	4300	22950	41780	0.278
30	**IMYR-30**	**IMYR-30-S**	29.980	29.993	29.987	30	44	2500	3200	34030	65120	0.465
35	**IMYR-35**	**IMYR-35-S**	34.975	34.991	34.984	35	52	2200	2800	38930	72960	0.636
40	**IMYR-40**	**IMYR-40-S**	39.975	39.991	39.984	40	58	1900	2400	49720	94440	0.825
45	**IMYR-45**	**IMYR-45-S**	44.975	44.991	44.984	45	63	1800	2300	51190	101010	0.901
50	**IMYR-50**	**IMYR-50-S**	49.975	49.991	49.984	50	68	1600	2000	54720	113570	0.960

*Limiting Speeds shown in the table above should be used as a guideline only as each individual application and load scenario will vary. The figures given assume bearings operating within optimal conditions only.

Full Compliment Yoke Roller in Stainless Steel

STUD TYPE

Series SMY — Unsealed, full compliment in stainless steel

Series SMY-S — Sealed, full compliment in stainless steel

Product Specification Options

Material	S	Stainless Steel
Roller Guide	No symbol	Full Compliment
Seal Structure	S	Sealed
	No Symbol	Unsealed
Roller Design	No Symbol	Crowned OD
	X	Cylindrical OD

Size	Part Numbers		Roller						Corner Radius
	Unsealed Bearing Part Number	Sealed Bearing Part Number	A	B		C	D		
			Roller OD	Bore Dia.		Roller Width	Total Width		
mm			mm	Min (mm)	Max (mm)	mm	Min (mm)	Max (mm)	mm
5	**SMY-5**	**SMY-5-S**	16	4.992	5.000	11	12	11.82	0.3
6	**SMY-6**	**SMY-6-S**	19	5.992	6.000	11	12	11.82	0.3
8	**SMY-8**	**SMY-8-S**	24	7.992	8.000	14	15	14.82	0.5
10	**SMY-10**	**SMY-10-S**	30	9.992	10.000	14	15	14.82	1
12	**SMY-12**	**SMY-12-S**	32	11.992	12.000	14	15	14.82	1
15	**SMY-15**	**SMY-15-S**	35	14.992	15.000	18	19	18.79	1
17	**SMY-17**	**SMY-17-S**	40	16.992	17.000	20	21	20.79	1.5
20	**SMY-20**	**SMY-20-S**	47	19.990	20.000	24	25	24.79	1.5
25	**SMY-25**	**SMY-25-S**	52	24.990	25.000	24	25	24.79	1.5
30	**SMY-30**	**SMY-30-S**	62	29.990	30.000	28	29	28.79	1.5
35	**SMY-35**	**SMY-35-S**	72	34.988	35.000	28	29	28.79	2
40	**SMY-40**	**SMY-40-S**	80	39.988	40.000	30	32	31.75	2
45	**SMY-45**	**SMY-45-S**	85	44.988	45.000	30	32	31.75	2
50	**SMY-50**	**SMY-50-S**	90	49.988	50.000	30	32	31.75	2

*Cylindrical roller surface is available, include and "X" suffix in the part number e.g. SMY-62-X and SMY-62-SX, please refer to the part numbering section

*The standard UNASIS metric yoke roller comes with seals and crowned outer roller diameter

Full Compliment Yoke Roller in Stainless Steel

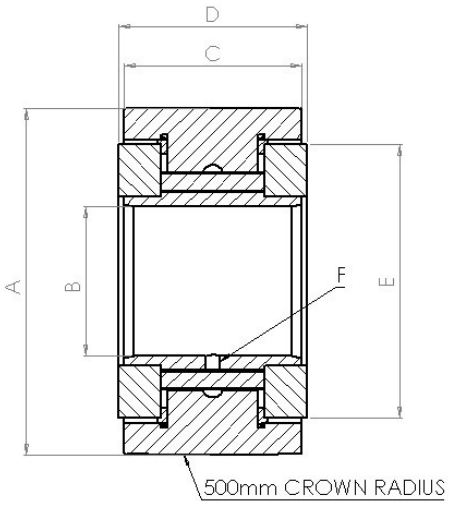

Size	Part Numbers		Mounting Dimensions					Speed		Load Ratings		Mass
	Unsealed Bearing Part Number	Sealed Bearing Part Number	Shaft Diameter				E	Grease	Oil	Dynamic	Static	
			Loose Fit for Light Loads (g6)		Light Transition Fit for Medium Loads (h6)		Clamping Dia. Min					
mm			Min (mm)	Max (mm)	Min (mm)	Max (mm)	mm	rpm	rpm	N	N	kg
5	**SMY-5**	**SMY-5-S**	4.988	4.996	4.992	5	11	11700	15300	6264	7506	0.014
6	**SMY-6**	**SMY-6-S**	5.988	5.996	5.992	6	13	9450	12150	7236	9441	0.021
8	**SMY-8**	**SMY-8-S**	7.986	7.995	7.991	8	16	7560	9900	10323	13680	0.043
10	**SMY-10**	**SMY-10-S**	9.986	9.995	9.991	10	19	5760	7470	12006	16416	0.062
12	**SMY-12**	**SMY-12-S**	11.983	11.994	11.989	12	21	4860	6300	12978	18801	0.069
15	**SMY-15**	**SMY-15-S**	14.983	14.994	14.989	15	24	3780	4860	18270	30717	0.105
17	**SMY-17**	**SMY-17-S**	16.983	16.994	16.989	17	27	2970	3870	20916	34686	0.153
20	**SMY-20**	**SMY-20-S**	19.98	19.993	19.987	20	30	2340	3060	27711	51903	0.255
25	**SMY-25**	**SMY-25-S**	24.98	24.993	24.987	25	36	1980	2610	30717	63369	0.284
30	**SMY-30**	**SMY-30-S**	29.98	29.993	29.987	30	44	1530	1980	44748	96561	0.476
35	**SMY-35**	**SMY-35-S**	34.975	34.991	34.984	35	52	1350	1710	51192	108207	0.649
40	**SMY-40**	**SMY-40-S**	39.975	39.991	39.984	40	58	1170	1530	63018	133191	0.845
45	**SMY-45**	**SMY-45-S**	44.975	44.991	44.984	45	63	1080	1350	66375	146871	0.924
50	**SMY-50**	**SMY-50-S**	49.975	49.991	49.984	50	68	990	1260	69462	160551	0.984

*Limiting Speeds shown in the table above should be used as a guideline only as each individual application and load scenario will vary. The figures given assume bearings operating within optimal conditions only.

Caged Yoke Roller in Stainless Steel

STUD TYPE

Series SMYR — Unsealed, caged type in stainless steel

Series SMYR-S — Sealed, caged type in stainless steel

Product Specification Options

Material	S	Stainless Steel
Roller Guide	R	Caged
Seal Structure	S	Sealed
	No Symbol	Unsealed
Roller Design	No Symbol	Crowned OD
	X	Cylindrical OD

Size	Part Numbers		Roller						Corner Radius
	Unsealed Bearing Part Number	Sealed Bearing Part Number	A	B		C	D		
			Roller OD	Bore Dia.		Roller Width	Total Width		
mm			mm	Min (mm)	Max (mm)	mm	Min (mm)	Max (mm)	mm
5	**SMYR-5**	**SMYR-5-S**	16	4.992	5.000	11	12	11.82	0.3
6	**SMYR-6**	**SMYR-6-S**	19	5.992	6.000	11	12	11.82	0.3
8	**SMYR-8**	**SMYR-8-S**	24	7.992	8.000	14	15	14.82	0.5
10	**SMYR-10**	**SMYR-10-S**	30	9.992	10.000	14	15	14.82	1
12	**SMYR-12**	**SMYR-12-S**	32	11.992	12.000	14	15	14.82	1
15	**SMYR-15**	**SMYR-15-S**	35	14.992	15.000	18	19	18.79	1
17	**SMYR-17**	**SMYR-17-S**	40	16.992	17.000	20	21	20.79	1.5
20	**SMYR-20**	**SMYR-20-S**	47	19.990	20.000	24	25	24.79	1.5
25	**SMYR-25**	**SMYR-25-S**	52	24.990	25.000	24	25	24.79	1.5
30	**SMYR-30**	**SMYR-30-S**	62	29.990	30.000	28	29	28.79	1.5
35	**SMYR-35**	**SMYR-35-S**	72	34.988	35.000	28	29	28.79	2
40	**SMYR-40**	**SMYR-40-S**	80	39.988	40.000	30	32	31.75	2
45	**SMYR-45**	**SMYR-45-S**	85	44.988	45.000	30	32	31.75	2
50	**SMYR-50**	**SMYR-50-S**	90	49.988	50.000	30	32	31.75	2

*Cylindrical roller surface is available, include and "X" suffix in the part number e.g. SMYR-62-X and SMYR-62-SX, please refer to the part numbering section

*The standard UNASIS metric yoke roller comes with seals and crowned outer roller diameter

Caged Yoke Roller in Stainless Steel

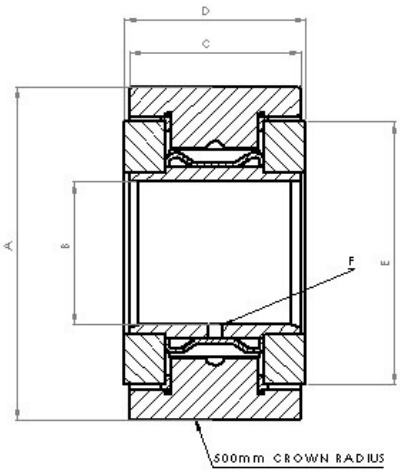

Size	Part Numbers		Mounting Dimensions					Speed		Load Ratings		Mass
	Unsealed Bearing Part Number	Sealed Bearing Part Number	Shaft Diameter				E	Grease	Oil	Dynamic	Static	
			Loose Fit for Light Loads (g6)		Light Transition Fit for Medium Loads (h6)		Clamping Dia. Min					
mm			Min (mm)	Max (mm)	Min (mm)	Max (mm)	mm	rpm	rpm	N	N	kg
5	**SMYR-5**	**SMYR-5-S**	4.988	4.996	4.992	5	11	17550	22500	3708	3708	0.011
6	**SMYR-6**	**SMYR-6-S**	5.988	5.996	5.992	6	13	13950	18000	4059	4500	0.018
8	**SMYR-8**	**SMYR-8-S**	7.986	7.995	7.991	8	16	11250	14400	6174	6975	0.040
10	**SMYR-10**	**SMYR-10-S**	9.986	9.995	9.991	10	19	8640	11250	7416	8739	0.060
12	**SMYR-12**	**SMYR-12-S**	11.983	11.994	11.989	12	21	7290	9450	7857	9801	0.067
15	**SMYR-15**	**SMYR-15-S**	14.983	14.994	14.989	15	24	5670	7380	11736	17127	0.102
17	**SMYR-17**	**SMYR-17-S**	16.983	16.994	16.989	17	27	4410	5760	14391	21357	0.150
20	**SMYR-20**	**SMYR-20-S**	19.98	19.993	19.987	20	30	3510	4500	19152	32130	0.252
25	**SMYR-25**	**SMYR-25-S**	24.98	24.993	24.987	25	36	2970	3870	20655	37602	0.278
30	**SMYR-30**	**SMYR-30-S**	29.98	29.993	29.987	30	44	2250	2880	30627	58608	0.465
35	**SMYR-35**	**SMYR-35-S**	34.975	34.991	34.984	35	52	1980	2520	35037	65664	0.636
40	**SMYR-40**	**SMYR-40-S**	39.975	39.991	39.984	40	58	1710	2160	44748	84996	0.825
45	**SMYR-45**	**SMYR-45-S**	44.975	44.991	44.984	45	63	1620	2070	46071	90909	0.901
50	**SMYR-50**	**SMYR-50-S**	49.975	49.991	49.984	50	68	1440	1800	49248	102213	0.960

*Limiting Speeds shown in the table above should be used as a guideline only as each individual application and load scenario will vary. The figures given assume bearings operating within optimal conditions only.

Full Compliment Yoke Roller with Heavy Duty Cylindrical Rollers

STUD TYPE

Series IMYH — Unsealed, full compliment with cylindrical rollers

Series IMYH-S — Sealed, full compliment with cylindrical roller

Product Specification Options

Material	I	Steel
Roller Guide	No symbol	Full Compliment
Needle Design	H	Cylindrical Roller
Seal Structure	S	Sealed
	No Symbol	Unsealed
Roller Design	No Symbol	Crowned OD
	X	Cylindrical OD

Size	Part Numbers		Roller						
	Unsealed Bearing Part Number	Sealed Bearing Part Number	A	B		C	D		E
			Roller OD	Bore Dia.		Roller Width	Total Width		Corner Radius
mm			mm	Min (mm)	Max (mm)	mm	Min (mm)	Max (mm)	mm
15	**IMYH-15**	**IMYH-15-S**	35	15	14.992	18	19	18.79	0.6
17	**IMYH-17**	**IMYH-17-S**	40	17	16.992	20	21	20.79	1.0
20	**IMYH-20**	**IMYH-20-S**	47	20	19.990	24	25	24.79	1.0
25	**IMYH-25**	**IMYH-25-S**	52	25	24.990	24	25	24.79	1.0
30	**IMYH-30**	**IMYH-30-S**	62	30	29.990	28	29	28.79	1.0
35	**IMYH-35**	**IMYH-35-S**	72	35	34.988	28	29	28.79	1.1
40	**IMYH-40**	**IMYH-40-S**	80	40	39.988	30	32	31.75	1.1
45	**IMYH-45**	**IMYH-45-S**	85	45	44.988	30	32	31.75	1.1
50	**IMYH-50**	**IMYH-50-S**	90	50	49.880	30	32	31.75	1.1

*Cylindrical roller surface is available, include and "X" suffix in the part number e.g. IMYH-62-X and IMYH-62-SX, please refer to the part numbering section

*The standard UNASIS metric yoke roller comes with seals and crowned outer roller diameter

Full Compliment Yoke Roller with Heavy Duty Cylindrical Rollers

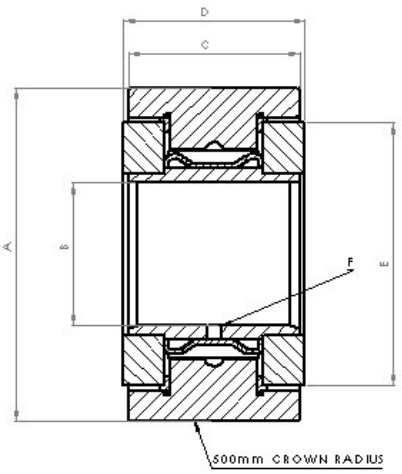

Size	Part Numbers		Speed	Load Ratings		Mass
	Unsealed Bearing Part Number	Sealed Bearing Part Number	Limiting	Dynamic	Static	
mm			rpm	N	N	kg
15	**IMYH-15**	**IMYH-15-S**	6500	23000	27000	0.099
17	**IMYH-17**	**IMYH-17-S**	5500	25000	31000	0.147
20	**IMYH-20**	**IMYH-20-S**	4200	38000	48000	0.245
25	**IMYH-25**	**IMYH-25-S**	3400	42000	57000	0.281
30	**IMYH-30**	**IMYH-30-S**	2600	58000	76000	0.465
35	**IMYH-35**	**IMYH-35-S**	2100	64000	89000	0.630
40	**IMYH-40**	**IMYH-40-S**	1600	89000	130000	0.816
45	**IMYH-45**	**IMYH-45-S**	1400	94000	143000	0.883
50	**IMYH-50**	**IMYH-50-S**	1300	99000	156000	0.950

*Limiting Speeds shown in the table above should be used as a guideline only as each individual application and load scenario will vary. The figures given assume bearings operating within optimal conditions only.

Interchange Tables

Cam Followers

UNASIS		McGill		INA - SKF - NTN		Smith		IKO - THK	
Caged	Full Compliment	Caged	Full Compliment	Caged	Full Compliment	Caged	Full Compliment	Caged	Full Compliment
IMCR-13	IMC-13	MCFR-13	MCF-13	-	-	MCR-13	MCRV-13	CF5	-
IMCR-16	IMC-16	MCFR-16	MCF-16	KR-16	KRV-16	MCR-16	MCRV-16	CF6R	CF6VR
IMCR-19	IMC-19	MCFR-19	MCF-19	KR-19	KRV-19	MCR-19	MCRV-19	CF8R	CF8VR
IMCR-22	IMC-22	MCFR-22	MCF-22	KR-22	KRV-22	MCR-22	MCRV-22	-	-
IMCR-26	IMC-26	MCFR-26	MCF-26	KR-26	KRV-26	MCR-26	MCRV-26	-	-
IMCR-30	IMC-30	MCFR-30	MCF-30	KR-30	KRV-30	MCR-30	MCRV-30	CF12R	CF12VR
IMCR-32	IMC-32	MCFR-32	MCF-32	KR-32	KRV-32	MCR-32	MCRV-32	CF12-1R	CF12-1VR
IMCR-35	IMC-35	MCFR-35	MCF-35	KR-35	KRV-35	MCR-35	MCRV-35	CF16R	CF16VR
IMCR-40	IMC-40	MCFR-40	MCF-40	KR-40	KRV-40	MCR-40	MCRV-40	-	-
IMCR-47	IMC-47	MCFR-47	MCF-47	KR-47	KRV-47	MCR-47	MCRV-47	-	-
IMCR-52	IMC-52	MCFR-52	MCF-52	KR-52	KRV-52	MCR-52	MCRV-52	-	-
IMCR-62	IMC-62	MCFR-62	MCF-62	KR-62	KRV-62	MCR-62	MCRV-62	-	-
IMCR-72	IMC-72	MCFR-72	MCF-72	KR-72	KRV-72	MCR-72	MCRV-72	-	-
IMCR-80	IMC-80	MCFR-80	MCF-80	KR-80	KRV-80	MCR-80	MCRV-80	CF30R	CF30VVR
IMCR-85	IMC-85	MCFR-85	MCF-85	KR-85	KRV-85	MCR-85	MCRV-85	CF30-1R	CF30-1VR
IMCR-90	IMC-90	MCFR-90	MCF-90	KR-90	KRV-90	MCR-90	MCRV-90	CF30-2R	CF30-2VR

Yoke Rollers

UNASIS		McGill		INA - SKF - NTN		Smith		IKO - THK	
Caged	Full Compliment	Caged	Full Compliment	Caged	Full Compliment	Caged	Full Compliment	Caged	Full Compliment
IMYR-5	IMY-5	MCYRR-5	MCYR-5	NATR-5	NATV-5	MYR-5	MYRV-5	NART-5-R	NART-5-VR
IMYR-6	IMY-6	MCYRR-6	MCYR-6	NATR-6	NATV-6	MYR-6	MYRV-6	NART-6-R	NART-6-VR
IMYR-8	IMY-8	MCYRR-8	MCYR-8	NATR-8	NATV-8	MYR-8	MYRV-8	NART-8-R	NART-8-VR
IMYR-10	IMY-10	MCYRR-10	MCYR-10	NATR-10	NATV-10	MYR-10	MYRV-10	NART-10-R	NART-10-VR
IMYR-12	IMY-12	MCYRR-12	MCYR-12	NATR-12	NATV-12	MYR-12	MYRV-12	NART-12-R	NART-12-VR
IMYR-15	IMY-15	MCYRR-15	MCYR-15	NATR-15	NATV-15	MYR-15	MYRV-15	NART-15-R	NART-15-VR
IMYR-17	IMY-17	MCYRR-17	MCYR-17	NATR-17	NATV-17	MYR-17	MYRV-17	NART-17-R	NART-17-VR
IMYR-20	IMY-20	MCYRR-20	MCYR-20	NATR-20	NATV-20	MYR-20	MYRV-20	NART-20-R	NART-20-VR
IMYR-25	IMY-25	MCYRR-25	MCYR-25	NATR-25	NATV-25	MYR-25	MYRV-25	NART-25-R	NART-25-VR
IMYR-30	IMY-30	MCYRR-30	MCYR-30	NATR-30	NATV-30	MYR-30	MYRV-30	NART-30-R	NART-30-VR
IMYR-35	IMY-35	MCYRR-35	MCYR-35	NATR-35	NATV-35	MYR-35	MYRV-35	NART-35-R	NART-35-VR
IMYR-40	IMY-40	MCYRR-40	MCYR-40	NATR-40	NATV-40	MYR-40	MYRV-40	NART-40-R	NART-40-VR
IMYR-45	IMY-45	MCYRR-45	MCYR-45	NATR-45	N/A	MYR-45	MYRV-45	NART-45-R	NART-45-VR
IMYR-50	IMY-50	MCYRR-50	MCYR-50	NATR-50	NATV-50	MYR-50	MYRV-50	NART-50-R	NART-50-VR

Interchange for Other Cam-Follower and Yoke Roller Coding

Optional Features	UNASIS	McGill	INA - SKF	NTN	Smith	IKO	THK
Seals	Add Suffix "SB"	Add Suffix "S"	Add Suffix "PP"	Add Suffix "LL"	Add Suffix "S"	Add Suffix "UU"	Add Suffix "UU"
Cylindrical O.D.	Add Suffix "X"	Add Suffix "X"	Add Suffix "X"	Add Suffix "X"	Add Suffix "C"	Remove Suffix "R"	Remove Suffix "R"
*Hexagonal Head**	Add Suffix "B"	Add Suffix "B"	Add Suffix "SK"	Add Suffix "H"	Add Suffix "B"	Add Suffix "B"	Add Suffix "A"
*Eccentric Collar**	Add Prefix "E"	Add Prefix "E"	Add Prefix "E"	-	Add Prefix "E"	Add Prefix "E"	-

**Not applicable to yoke roller types*

Useful Calculations and Reference Notes

L_{10} Life Calculation (Millions of revolutions)

Where,
L_{10} = Life (Million revolutions)

DLR = Dynamic load rating (N)

P = Constant applied radial load (N)

$$L_{10} = \left(\frac{DLR}{P}\right)^{10/3}$$

L_{10} Life Calculation (Hours)

Where,
L_{10} = Life (hours)

DLR = Dynamic load rating (N)

P = Constant applied radial load (N)

S = Speed (rpm)

$$L_{10} = \frac{16{,}666}{S}\left(\frac{DLR}{P}\right)^{10/3}$$

Required Dynamic Load Rating

Where,
L_{10} = Life (Million revolutions)

DLR = Dynamic load rating (N)

P = Constant applied radial load (N)

S = Speed (rpm)

$$DLR = 0.054 \times P \times (L_{10} \times S)^{0.3}$$

Type of Load

The application bearing load should be multiplied by the appropriate factor and resulting value then used to calculate the approximate L_{10}

Load Type	Multiplication factor
Uniform and Constant	1
Light Shock	1.5
Medium Shock	2
Heavy Shock	3

Notes:

Notes:

This catalogue has been produced with a great amount of car and attention and all data has been checked for its accuracy. However, no liability can be assumed for any incorrect or incomplete data.

Due to the constant development and expansion of the product range, we reserve the right to make modifications without prior notice.

All rights reserved. Reproduction in whole or in part without authorization is prohibited.

UNASIS

PRECISION BEARINGS

OTAR

COMPONENTI INDUSTRIALI